016 40 004 1901T 241097 DONADINI & C

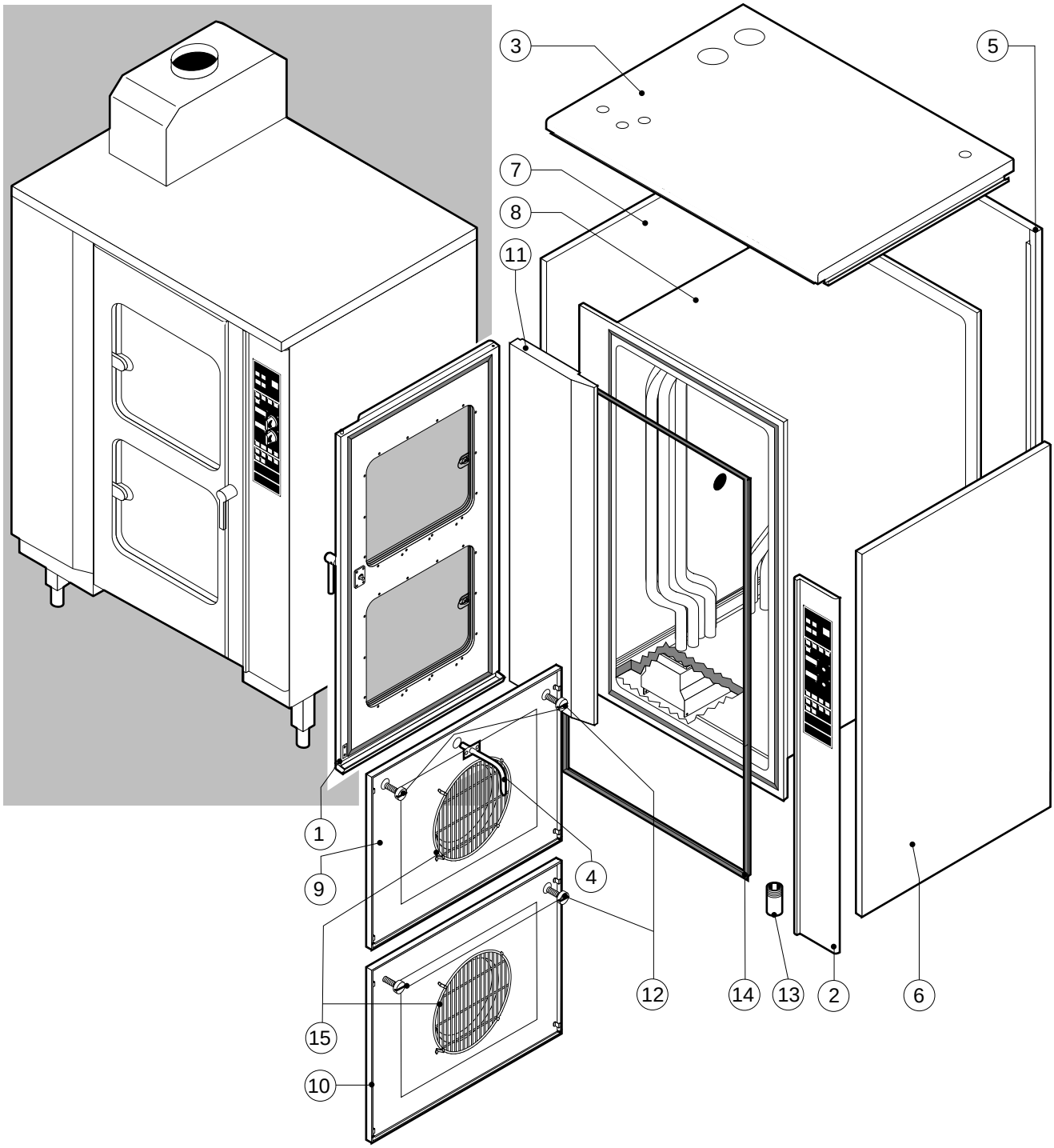

POS.	CODE	PIECES	DESCRIPTION
1	R10104290	1	DOOR ASSEMBLY
2	R10104670	1	CONTROL PANEL WITH PLATE
3	R10200450	1	COVER PANEL
4	R10201220	1	HUMIDIFIER PIPE
5	R10201650	1	REAR PANEL
6	R10201670	1	RIGHT SIDE PANEL
7	R10201680	1	LEFT SIDE PANEL
8	R10207191	1	COOKING CABINET ASSEMBLY
9	R10207291	1	UPPER FAN GUARD PANEL ASSEMBLY
10	R10207321	1	LOWER FAN GUARD PANEL ASSEMBLY
11	R10207720	1	FRONT LEFT PANEL
12	R58003100	4	FAN GUARD FASTENING SCREW
13	R69070020	4	FOOT 1"1/2x133
14	R70041020	1	FRONT GASKET
15	R75300090	2	FAN GUARD GRID Ø 350

POS.	CODE	PIECES	DESCRIPTION

016 40 004 1902 011298 DONADINI & C

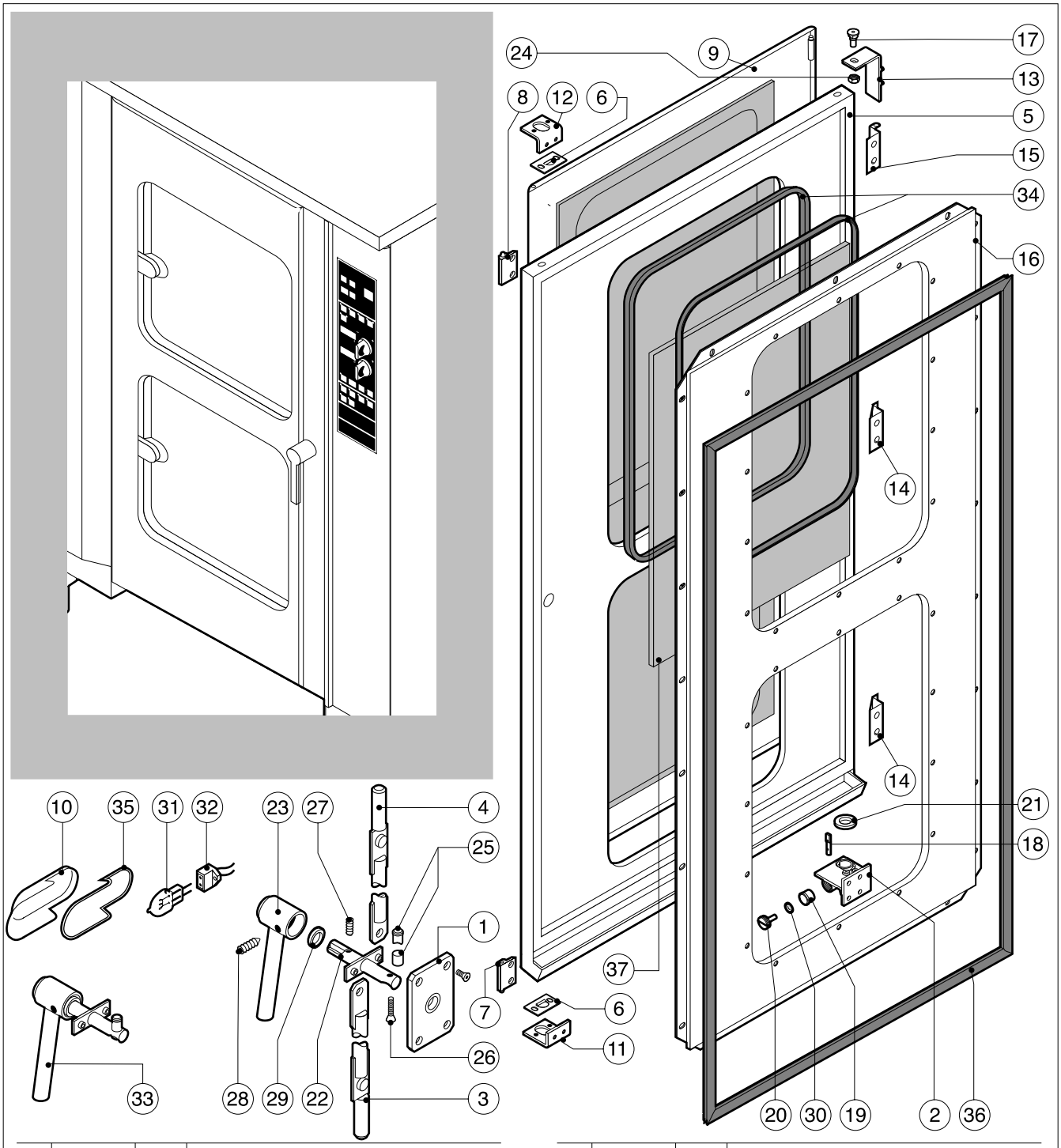

POS.	CODE	PIECES	DESCRIPTION
1	R03200970	1	DOOR LOCK REAR FLANGE
2	R10201330	1	LOWER DOOR HINGE WITH RETAINER
3	R10202950	1	LOWER DOOR ROD
4	R10202960	1	UPPER DOOR ROD
5	R10207640	1	DOOR
6	R10207680	2	DOOR ROD ADJUSTABLE PLATE
7	R10208290	1	FRONT LOWER DOOR PANEL CATCH
8	R10208300	1	FRONT UPPER DOOR PANEL CATCH
9	R10208350	1	FRONT DOOR PANEL
10	R10400150	2	LIGHT PROTECTION
11	R10411350	1	LOWER SQUARE FOR DOOR ROD
12	R10411360	1	UPPER SQUARE FOR DOOR ROD
13	R10413290	1	UPPER DOOR HINGE
14	R10456040	2	LOWER HINGE FOR FRONT DOOR PANEL
15	R10456050	1	UPPER HINGE FOR FRONT DOOR PANEL
16	R10456510	1	INNER DOOR PANEL
17	R58002150	1	HINGE PIN
18	R58002540	1	DOOR PIVOT SUNK KEY
19	R58002550	1	DOOR RETAINER GUIDE SHOE

POS.	CODE	PIECES	DESCRIPTION
20	R58002560	1	SCREW FOR LOWER DOOR HINGE
21	R58002570	1	WASHER Ø 30/15x3
22	R58003180	1	DOOR HANDLE PIN
23	R58003450	1	DOOR HANDLE
24	R58004050	1	NUT FOR UPPER DOOR HINGE
25	R58004781	1	DOOR HANDLE HOOK
26	R61040242	1	DOOR HANDLE HOOK SCREW
27	R61090052	1	GRUB SCREW M6x16
28	R61100262	1	GRUB SCREW M8x20
29	R61420021	1	ELASTIC WASHER
30	R61620091	16	BELLEVILLE WASHER Ø 14/6.4
31	R65270020	2	LIGHT 20W 12V G4
32	R65270400	2	LIGHT SOCKET
33	R69015050	1	DOOR HANDLE ASSEMBLY
34	R70040200	4	GLASS GASKET
35	R70040800	2	LIGHT PROTECTION GASKET
36	R70042050	1	DOOR GASKET
37	R71030120	2	DOOR GLASS

016 40 004 1903 270697 DONADINI & C

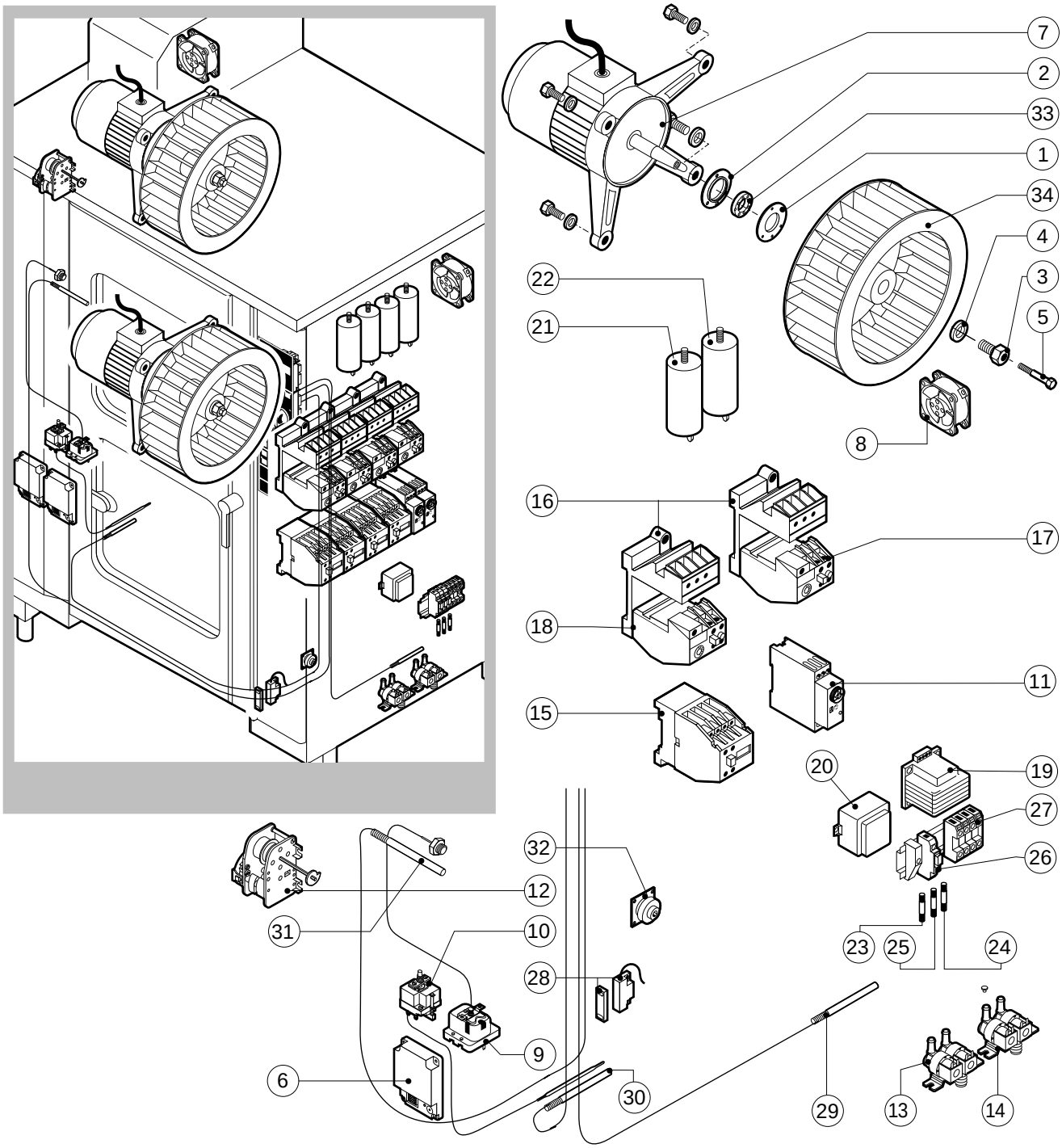

POS.	CODE	PIECES	DESCRIPTION
1	R58003840	2	MOTOR GASKET BRASS FLANGE
2	R58003850	2	MOTOR GASKET BRASS COUNTER FLANGE
3	R58004000	2	FAN SCREW M12x1.5 SX
4	R58004010	2	FAN WASHER Ø 30/12.5
5	R61020562	2	FAN SCREW TE A2 M6x55
6	R63060080	2	BURNER IGNITION PANEL WR 50A72-214
7	R65040031	2	MOTOR HP 1/0.3 KIT
8	R65060010	2	COMPONENTS VENTILATION MOTOR Ø 80
9	R65070070	1	CHAMBER SAFETY THERMOSTAT
10	R65070080	1	STEAM GENERATOR SAFETY THERMOSTAT
11	R65090450	2	IGNITION DELAY TIMER
12	R65095000	1	DAMPER SYSTEM
13	R65110040	1	SOLENOID VALVE 220V 50HZ
14	R65115000	1	SOLENOID VALVE 220V 50HZ WITH FLOW REDUCER
15	R65140150	4	CONTACTOR 3TF4011-OAUO 240V
16	R65160050	4	THERMIC SWITCH SUPPORT 3UX1418
17	R65160120	2	THERMIC PROTECTION 3UA5000-1C 1.6-2.5A
18	R65160130	2	THERMIC PROTECTION 3UA5000-1F 3.2-5A
19	R65180430	1	TRANSFORMER 40VA
20	R65180650	1	TRANSFORMER 23VA

POS.	CODE	PIECES	DESCRIPTION
21	R65190030	2	CAPACITOR 16 µF
22	R65190090	2	CAPACITOR 12.5 µF
23	R65200086	1	FUSE 0.125A (T)
24	R65200200	1	FUSE 2A
25	R65200350	1	FUSE 0.4A (T)
26	R65210020	3	FUSE CARRIER
27	R65220090	1	TERMINAL BOARD
28	R65265100	1	DOOR SWITCH
29	R65325000	1	PROBE PT100
30	R65325010	1	PROBE PT100 3m
31	R65325020	1	PROBE PT100 5m
32	R65330040	1	BUZZER
33	R70020050	2	MOTOR GASKET
34	R75400380	2	FAN Ø 350x120/24 50HZ P.D. KIT

016 40 004 1904 180797 DONADINI & C

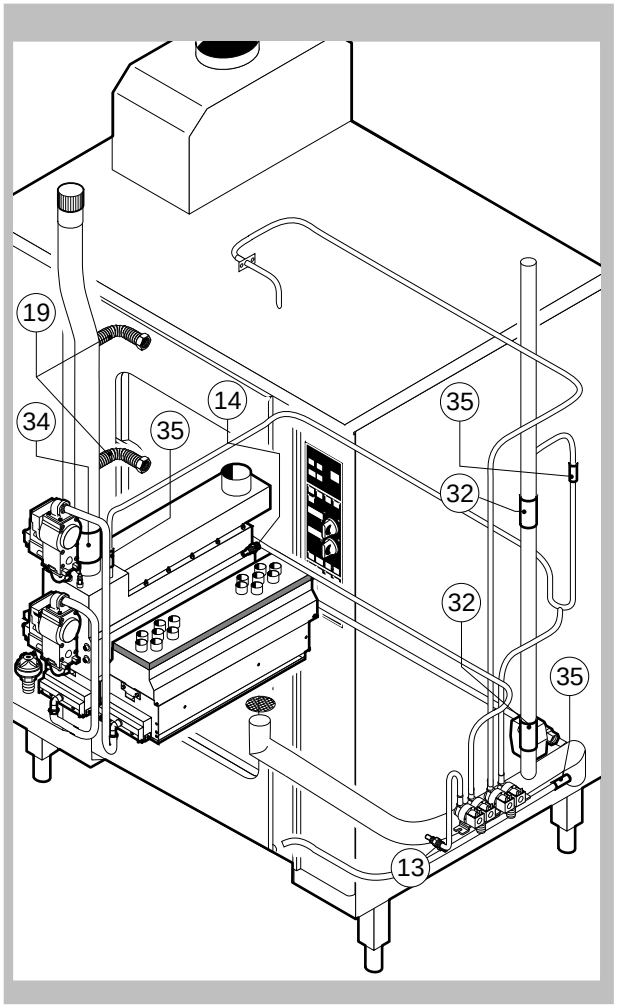

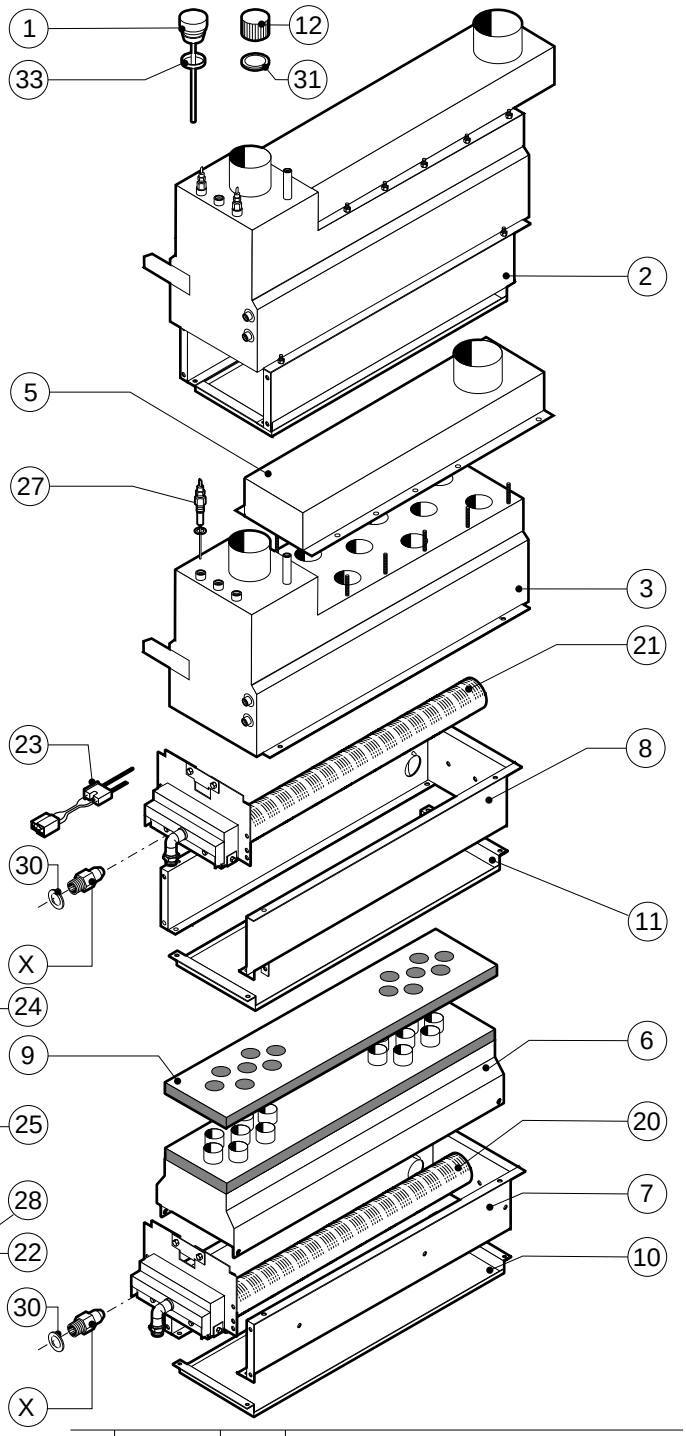

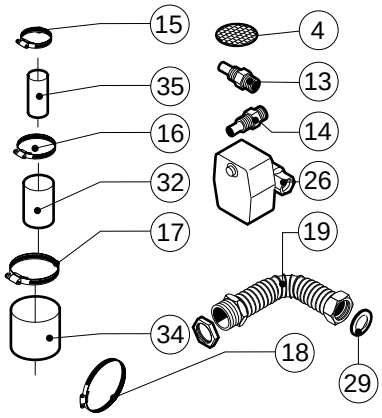

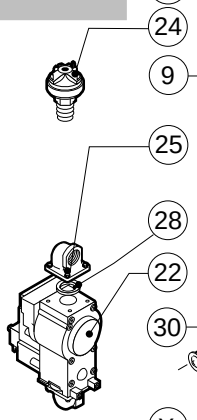

POS.	CODE	PIECES	DESCRIPTION
1	R10100140	1	DAMPER SYSTEM CAP
2	R10102270	1	STEAM GENERATOR ASSEMBLY
3	R10201020	1	STEAM GENERATOR
4	R10201720	1	DRAIN FILTER
5	R10202140	1	STEAM GENERATOR GAS FLUE PIPE
6	R10202440	1	COMBUSTION CABINET
7	R10202540	1	CABINET BURNERS SUPPORT
8	R10202630	1	STEAM GENERATOR SUPPORT
9	R10406250	1	COMBUSTION CABINET INSULATION PLATE
10	R10414110	1	CHAMBER BURNERS PROTECTION PLATE
11	R10414850	1	STEAM GENERATOR BURNERS PROTECTION PLATE
12	R58005680	1	STEAM GENERATOR DESCALING CAP 1"1/4 F
13	R58006080	1	STEAM QUENCHING NOZZLE Ø 2
14	R58006110	2	STEAM GENERATOR FLUSHING NOZZLE
15	R61630011	14	METAL CLAMPS 12-22/9
16	R61630021	2	METAL CLAMPS 30-45/9
17	R61630031	2	METAL CLAMPS 40-60/9
18	R61630041	4	METAL CLAMPS 70-90/9
19	R62180032	2	FLEXIBLE STEEL PIPE Ø 1"1/4 ASSEMBLY

POS.	CODE	PIECES	DESCRIPTION
20	R63016120	1	CHAMBER BURNER ASSEMBLY
21	R63016130	1	STEAM GENERATOR BURNER ASSEMBLY
22	R63020010	2	GAS SOLENOID VALVE VR4605
23	R63050040	2	IGNITOR/SENSOR WR 768G213
24	R63070010	1	GAS SAFETY PRESSURE SWITCH PG 901.61
25	R63080020	4	CURVED FLANGE 1/2"
26	R65110540	1	STEAM GENERATOR DRAIN MOTORIZED VALVE
27	R65320010	2	STEAM GENERATOR LEVEL PROBE
28	R70010070	4	RING
29	R70030080	2	GASKET Ø 27x39 1"1/4
30	R70030090	5	NOZZLE GASKET
31	R70050040	1	STEAM GENERATOR CAP GASKET
32	R70060010	2	SILICON COUPLING Ø 30
33	R70060020	1	DAMPER SYSTEM CAP GASKET
34	R70060040	1	SILICON COUPLING Ø 50
35	R70060060	3	SILICON COUPLING Ø 15
X		2	NOZZLE (See service manual)
X		3	NOZZLE (See service manual)

016 40 004 1905 250697 DONADINI & C

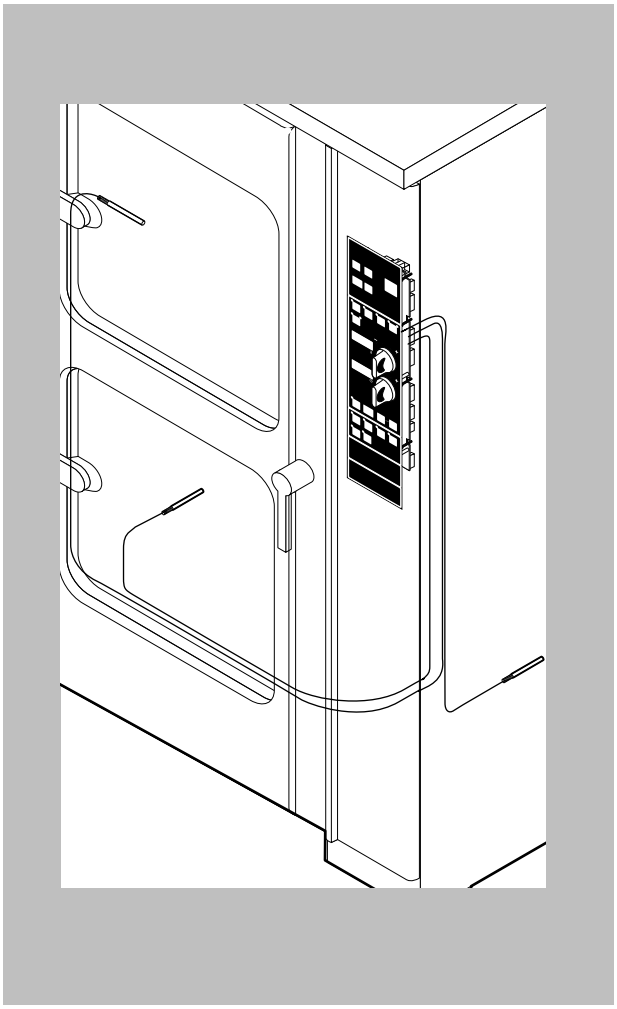

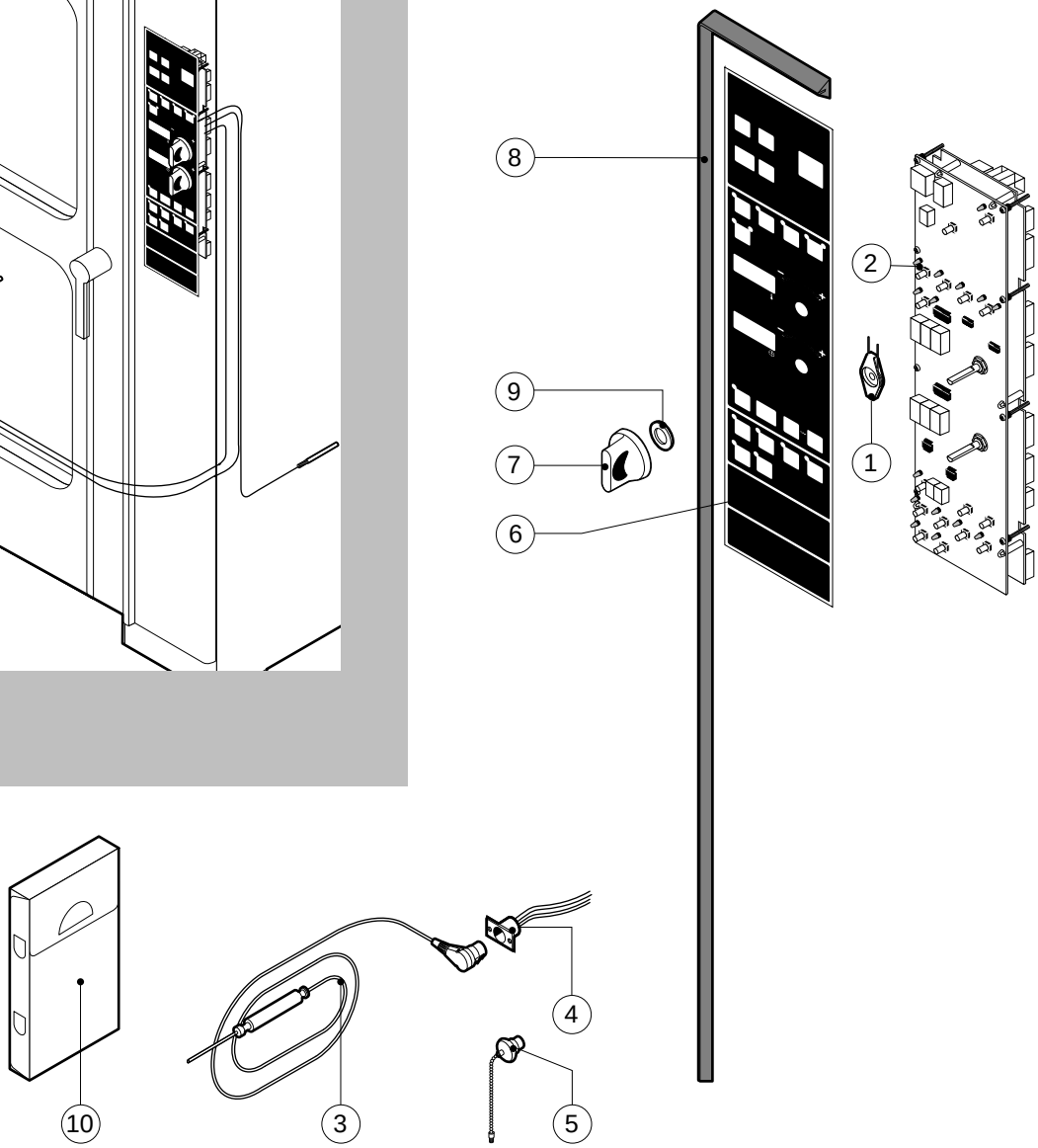

POS.	CODE	PIECES	DESCRIPTION
1	R10205120	2	KNOB SPRING
2	R65300820	1	CONTROL PANEL P.C. BOARD
3	R65320900	1	CORE TEMPERATURE PROBE
4	R65320920	1	CORE TEMPERATURE PROBE FEMALE CONNECTOR
5	R65321020	1	COVER FOR FEMALE CONNECTOR
6	R67010660	1	LAINOX PLATE
7	R69030150	2	KNOB KIT
8	R70040850	1	CONTROL PANEL GASKET
9	R70050020	4	KNOB GASKET
10	R86020420	1	CORE TEMPERATURE PROBE BOX

POS.	CODE	PIECES	DESCRIPTION