INSTALLATION AND MAINTENANCE MANUAL

COMBINATION OVEN WITH AND WITHOUT STEAM GENERATOR

GB

Technical service

90023110rev00

CONTENTS

		Page
1	• GENERAL REMINDERS	4
2	• TECHNICAL DATA	5
3	• SPECIAL REQUIREMENTS FOR THE INSTALLATION SITE	7
4	• STATUTORY REQUIREMENTS, TECHNICAL REGULATIONS AND DIRECTIVES	8
5	• POSITIONING	8
6	• ELECTRICAL CONNECTIONS AND EQUIPOTENTIAL BONDING	10
7	• POINTS TO REMEMBER WHEN MAKING THE ELECTRICAL CONNECTION	10
8	• WATER AND DRAIN CONNECTIONS	11
9	• VENTS	13
10	• GAS CONNECTION PROCEDURES	13
11	• OPERATING AT THE RATED HEAT OUTPUT	15
12	• COMMISSIONING AND TESTING	19
13	• IMPORTANT INFORMATION FOR THE USER	20
14	• INSTALLATION DIAGRAMS	21

MODELS

4 x GN 2/3	10 x GN 1/1
5 x GN 1/1	10 x GN 2/1
6 x GN 1/1	20 x GN 1/1
7 x GN 1/1	20 x GN 2/1
7 x GN 2/1	

VERSIONS

M - Standard electromechanical devices with manual controls, humidifier and lighting.

P - Programmable electronics with automatic humidity control, core probe and lighting.

T - Electronically controlled manual commands, 99 programmable programs, and 9 cycles in automatic sequencing: Automatic Cooking, CLIMA function with automatic venting, PLUS function, 6 speed Fan, multi-point core probe, self-diagnosis, humidifier, lighting and integrated washer unit.

The manufacturer accepts no liability for any inaccuracies in this manual attributable to printing or copying errors. We reserve the right to modify our products as we deem fit, without impairing their basic features.

The reproduction or copying of any part of this manual by any means whatsoever is strictly forbidden unless authorized previously in writing by the manufacturer.

15.09.2008

1 •GENERAL REMINDERS

1.1 • **The oven must be installed, commissioned and maintained only by a Lainox authorized service agent.**

1.2 • **Carefully read** the directions given in this manual; they contain important information on safety during installation, operation and maintenance.
Keep this manual in a safe place for future consultation!

1.3 • This appliance must be put **only to the use for which it is specifically intended,** i.e. cooking foods; any other type of use is improper and therefore dangerous.

1.4 • Having removed the packing **check that the appliance is not damaged in any way.**
If in doubt, proceed no further with installation of the appliance and contact the Lainox Customer Service or your dealer immediately.

1.5 • Packing materials **are potentially dangerous and must not be left where children** can play with them.

1.6 • Packing materials **must be disposed of in conformity with local regulations**. This normally means that the different materials are sorted according to type and collected as urban refuse.

1.7 • Before positioning and connecting the appliance, check that the utilities (electrical power, water and gas supplies) **are as indicated on the data plate**.
The data plate is on the right-hand side, at the bottom.

1.8 • Example of a data plate:

LOGO		
TYP. XXXXXXXX		
2008	NR XXXXXXXXXX	
3N AC 400V 50Hz		
1 x 0.25 kW	TOT 8 kW	kPa 200 - 500
IPX 5	CE	

LOGO		
TYP. XXXXXXXX		
2008	NR XXXXXXXXXX	
EN 203/A1	AC 230V 50Hz	
1 x 0.55 kW	TOT 1 kW	∑Qn 40 kW
A3 ☐ B13 ☐ B23 ☐		kPa 200 - 500
G 25 / m^3/h	G 20 / m^3/h	
Pmax / mbar	Pmax / mbar	G 30 3.16 Kg/h
Pmin / mbar	Pmin / mbar	Pmin / mbar
IT	Cat. II 2H3+	P mbar 20; 28-30/37
IPX 5	CE 0085	

1.9 • The positions of the inlet and drain connections are clearly labelled. For further details, see the installation diagram attached to this manual.

1.10 • In the event of breakdown or faulty operation, **switch off the oven immediately!**

1.11 • During installation and/or maintenance work it is recommended you wear gloves to protect your hands.

1.12 • Safety sticker
• Maximum height for inserting containers with liquids.

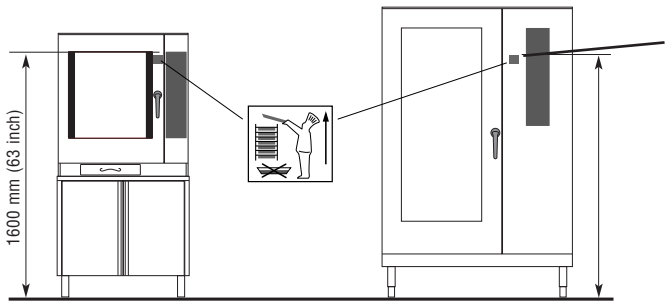

TABLE 1: GENERAL DATA - ELECTRIC OVENS

Model	Supply voltage	Frequency	Total power input	Amps	Chamber power	Boiler power	Motor	Oil-proof connecting cable
4 x GN 2/3	3N AC 400 V 3 AC 230 V **AC 230 V**	50 Hz	3.25 kW	5 8 **14**	3.15 kW	-	1 x 0.20 Kw	5 x 1 mm^2 4 x 1 mm^2 **3 x 1.5 mm^2**
5 x GN 1/1	**3N AC 400 V** 3 AC 230 V AC 230 V	50 Hz	6.25 kW	**9** 16 27	6 kW	-	1 x 0.20 Kw	**5 x 1 mm^2** 4 x 1.5 mm^2 3 x 4 mm^2
2 x 5 x GN 1/1	**3N AC 400 V** 3 AC 230 V	50 Hz	12.5 kW	**18** 31	6 + 6 kW	-	2 x 0.20 Kw	**5 x 2.5 mm^2** 4 x 4 mm^2
6 x GN 1/1 **7 x GN 1/1**	**3N AC 400 V** 3 AC 230 V AC 230 V	50 Hz	8 kW	**12** 20 35	7.5 kW	7,5 kW	1 x 0.25 Kw	**5 x 1.5 mm^2** 4 x 2.5 mm^2 3 x 6 mm^2 2)
7 x GN 2/1 **10 x GN 1/1**	**3N AC 400 V** 3 AC 230 V	50 Hz	16 kW	**23** 40	15 kW	15 kW	1 x 0.55 Kw	**5 x 2.5 mm^2** 4 x 6 mm^2
10 x GN 2/1	**3N AC 400 V** 3 AC 230 V	50 Hz	31 kW	**45** 78	30 kW	30 kW	1 x 0.55 Kw	**5 x 10 mm^2 3)** 4 x 25 mm^2
20 x GN 1/1	**3N AC 400 V** 3 AC 230 V	50 Hz	31.8 kW	**46** 80	30 kW	30 kW	2 x 0.55 Kw	**5 x 10 mm^2 3)** 4 x 25 mm^2
20 x GN 2/1	**3N AC 400 V** 3 AC 230 V	50 Hz	61.8 kW	**89** 155	60 kW	60 kW	2 x 0.55 Kw	**5 x 25 mm^2** 2x (4 x 25 mm^2)

***) 2 power cables - 1) min Ø 12 mm - 2) max Ø 18 mm - 3) min Ø 26 mm - 4) max Ø 44 mm**

Caution: The residual current device to be installed between the mains and the appliance must be sized for a leakage of 1 mA x kW of power installed.

TABLE 2: GENERAL DATA GAS OVENS

Model	Supply voltage	Frequency	Input	Motor	Oil-proof connecting cable	Gas power w/ boiler	Gas power w/o boiler	Gas connection
5 x GN 1/1	AC 230 V	50 Hz	0.25 kW	1 x 0,20 Kw	3 x 1 mm^2	-	8,5 kW	1 x R 1/2"
6 x GN 1/1	AC 230 V	50 Hz	0,5 kW	1 x 0,25 Kw	3 x 1 mm^2	14 kW	10 kW	1 x R 1/2"
10 x GN 1/1	AC 230 V	50 Hz	1 kW	1 x 0,55 Kw	3 x 1 mm^2	28 kW	18 kW	1 x R 1/2"
10 x GN 2/1	AC 230 V	50 Hz	1 kW	1 x 0,55 Kw	3 x 1 mm^2	40 kW	27 kW	1 x R 1/2"
20 x GN 1/1	AC 230 V	50 Hz	1,8 kW	2 x 0,55 Kw	3 x 1,5 mm^2	48 kW	36 kW	1 x R 1/2"
20 x GN 2/1	AC 230 V	50 Hz	1,8 kW	2 x 0,55 Kw	3 x 1,5 mm^2	80 kW	54 kW	1 x R 3/4"

TABLE 3: GENERAL WATER DATA

	WITH STEAM GENERATOR			
	Model	Water pressure kPa	Softened water consumption max.l/h	Water connection
ELECTRIC	6 x GN 1/1 7 x GN 1/1	200 - 500	10	2 x R 3/4" (1)
ELECTRIC	7 x GN 2/1 10 x GN 1/1	200 - 500	19	2 x R 3/4" (1)
ELECTRIC	10 x GN 2/1	200 - 500	30	2 x R 3/4" (1)
ELECTRIC	20 x GN 1/1	200 - 500	37	2 x R 3/4" (1)
ELECTRIC	20 x GN 2/1	200 - 500	68	2 x R 3/4" (1)
GAS	6 x GN 1/1	200 - 500	8	2 x R 3/4" (1)
GAS	10 x GN 1/1	200 - 500	17	2 x R 3/4" (1)
GAS	10 x GN 2/1	200 - 500	24	2 x R 3/4" (1)
GAS	20 x GN 1/1	200 - 500	24	2 x R 3/4" (1)
GAS	20 x GN 2/1	200 - 500	48	2 x R 3/4" (1)

	WITHOUT STEAM GENERATOR			
	Model	Water pressure kPa	Softened water consumption max.l/h	Water connection
ELECTRIC	4 x GN 2/3	200 - 500	4	2 x R 3/4" (1)
ELECTRIC	5 x GN 1/1	200 - 500	8	2 x R 3/4" (1)
ELECTRIC	2 x 5 x GN 1/1	200 - 500	8 + 8	2 x R 3/4" (1)
ELECTRIC	6 x GN 1/1 7 x GN 1/1	200 - 500	8	2 x R 3/4" (1)
ELECTRIC	7 x GN 2/1 10 x GN 1/1	200 - 500	15	2 x R 3/4" (1)
ELECTRIC	10 x GN 2/1	200 - 500	15	2 x R 3/4" (1)
ELECTRIC	20 x GN 1/1	200 - 500	30	2 x R 3/4" (1)
ELECTRIC	20 x GN 2/1	200 - 500	30	2 x R 3/4" (1)
GAS	5 x GN 1/1	200 - 500	8	2 x R 3/4" (1)
GAS	6 x GN 1/1	200 - 500	15	2 x R 3/4" (1)
GAS	10 x GN 1/1	200 - 500	22	2 x R 3/4" (1)
GAS	10 x GN 2/1	200 - 500	22	2 x R 3/4" (1)
GAS	20 x GN 1/1	200 - 500	30	2 x R 3/4" (1)
GAS	20 x GN 2/1	200 - 500	44	2 x R 3/4" (1)

(1) The ovens are equipped with two water inlets, one for non-softened cold water and the other for hot water (max. 50 °C) or softened cold water.

TABLE 4: FLUE GAS EXTRACTION DATA (TYPE B13)

Models	6 x GN 1/1 7 x GN 1/1	10 x GN 1/1	10 x GN 2/1	20 x GN 1/1	20 x GN 2/1
Flue liner pressure	- 0.9 Pa	- 1.8 Pa	- 2.7 Pa	- 2.2 Pa	-
Volumetric mass	18.6 g/sec.	28.4 g/sec.	34.5 g/sec.	39.9 g/sec.	-
Flue gas temperature	145 ˚C	190 ˚C	250 ˚C	210 ˚C	-

3 • SPECIAL REQUIREMENTS FOR THE INSTALLATION SITE

3.1 • The room where the oven is to be fitted has to be well ventilated with all the openings required for rooms with gas installations (see specific regulations).

3.2 • In addition, it is good policy to locate the appliance under an extractor hood so that cooking vapours can be removed rapidly and continuously.

3.3 • The room must have a flue gas extraction stack (appliances with installation type B13), or a suitable flue gas extraction system fitted with all relevant safety devices (appliances with installation type B23). Further details are given under the heading: *"Gas connection procedures".* Check with the appropriate agency whether or not special authorization is required for the emission of flue gases into the atmosphere.

3.4 • Current CEI (Italian Electrotechnical Committee) regulations require the installation of a multiple pole switch between the oven and the electrical power supply; the switch must have a contact gap of at least 3 mm on each pole.

3.5 • The oven needs two water supplies, one of which need not be softened, but must necessarily be cold (for condensing steam). The other supply, serving the vaporizer, must incorporate a softener with suitable flow and pressure specifications (see technical data and water connections heading). A shutoff valve must be installed on each of the water supply pipelines to the appliance.

3.6 • The room must have a water drain in a good position for the oven to be installed, its specifications are given under the heading *"Water and drain connections"* in this manual.

3.7 • The gas supply plumbing must be installed in accordance with current regulations, adopting pipe sections and pressures suitable for the appliance (see technical data and gas connections heading).
A fast acting shutoff valve must be installed on the gas inlet line to the appliance. It is absolutely essential that this valve should be specified to current standards and type test approved.

3.8 • The electrical isolating switch and the water and gas shutoff valves must all be located near to the appliance, within easy reach for the user.

4 • STATUTORY REQUIREMENTS, TECHNICAL REGULATIONS AND DIRECTIVES

Throughout installation it is vital to observe the following requirements:

4.1 • any health and hygiene standards applicable to kitchens and eating places;

4.2 • local and/or territorial building regulations and fire prevention standards;

4.3 • current accident prevention guidelines;

4.4 • CEI requirements relating to electrical systems;

4.5 • UNI-CIG 8723 Standard “Gas systems for appliances used in professional kitchens and communal facilities”;

4.5 • the regulations of the gas supply company or agency;

4.7 • the regulations of the electrical power supply company or agency;

4.8 • any other local regulations.

5 • POSITIONING

5.1 • To position the appliances, it is recommended to use the mount offered by the manufacturer; should you want to do things differently, it is necessary to take account of the weight of the appliance.

5.2 • Before manoeuvring the oven into the selected position, attach the water inlet hoses and waste pipe to the relative connection points (refer to headings describing the water and drain connections).

5.3 • The distances from other appliances or from adjacent walls that must be left to allow access for servicing operations will be found on the installation diagram for the oven to connect. In the event of the oven being installed directly against an inflammable wall, suitable heat insulation must be provided.

Current fire regulations should be meticulously observed and respected. Do not obstruct the openings and slots in the casing as they disperse the heat in the electric component compartment.
Keep strictly to the installation diagrams.

5.4 • Once the appliance is installed, the electrical power cable must be protected, and never stretched or tugged.

5.5 • The appliance must be level: any difference in level or sloping of the supporting surface should be eliminated. Differences in level or sloping negatively affect oven operation.

5.6 • Remove all packing materials and peel away the protective plastic film from all external surfaces of the oven.

5.7 • For free-standing models, the appliance needs to be levelled: small differences in level of the supporting surface can be eliminated with the adjustable feet (by screwing or unscrewing them). A significantly uneven or sloping stance can affect the operation of the oven adversely.

For models equipped with a pan trolley, it is necessary to pay special attention when levelling.

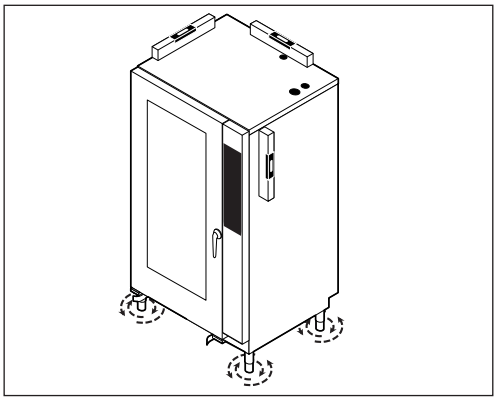

5.8 • **Lining up the pan trolleys 20 x 1/1 GN and 20 x 2/1 GN.** If the floor is not level, aremedy must be found using an access rampwith a maximum gradient of 4° (not included inthe supply).
If there is an outlet grate in front of theappliance, it is necessary to fit runners in the pan trolley entry area.

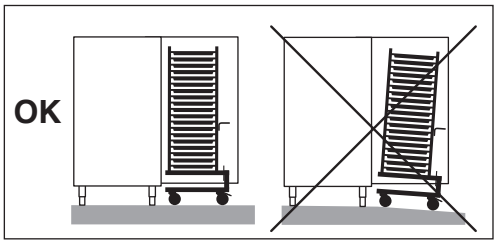

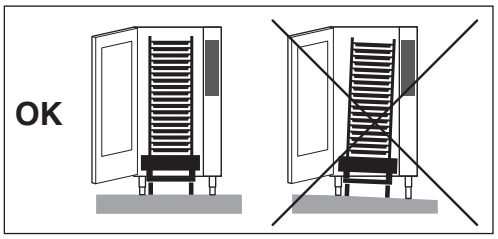

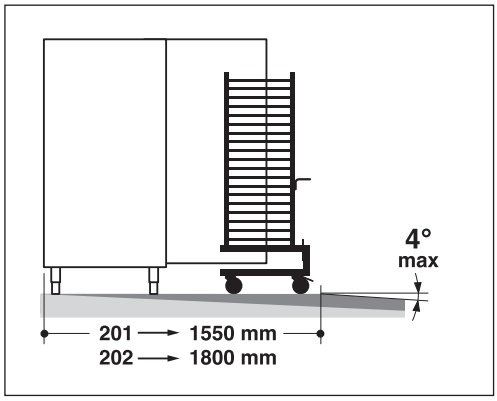

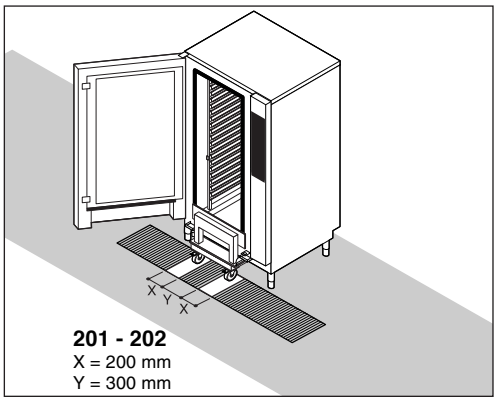

6 • ELECTRICAL CONNECTIONS AND EQUIPOTENTIAL BONDING

6.1 • As this oven is a type X appliance (oven without power cable and plug), the cable and other hardware needed to make the connection to the electrical power supply must be provided by the installer. The cable must satisfy the requirements indicated in table 1 *"General data"*. As already mentioned, the oven must be connected to the power supply by way of a multiple pole main isolating switch ensuring a gap between open contacts of at least 3 mm on each pole.

6.2 • To gain access to the AC mains connection terminal board, the right hand panel of the casing must be removed by undoing the fixing screws (all models).

6.3 • The cable must be fed in from beneath the clamp. The individual wires are then fastened to the corresponding terminals of the terminal board. The earth wire must be longer than the other wires, so that in the event of the cable being jerked or the clamp broken, the live wires will disconnect first.
Check the efficiency of the isolating switch.

6.4 • The oven must be kept in an equipotential system. This connection is made by wiring a conductor of nominal cross section 10 mm^2 to the corresponding terminal at the back of the oven, which is marked with the internationally recognized symbol.
All appliances in the room are bonded in this way and connected to the earth system of the building.

6.5 • The electrical safety of this appliance can be guaranteed only when it is connected correctly to an efficient earth system, in compliance with current standards.

7 • POINTS TO REMEMBER WHEN MAKING THE ELECTRICAL CONNECTION

7.1 • As all ovens of the series are fitted with an alternating fan motor (clockwise and anticlockwise rotation), there is no need for the fan to rotate in any particular direction. Simply verify, when commissioning the appliance, that the fan is balanced and rotates freely. **Warning:** the 20 x GN 1/1 and 20 x GN 2/1 models are equipped with two motors.

7.2 • When making the electrical connection you need to take care that the neutral pin of the terminal block corresponds to the neutral wire of the supply line. If this connection is not made correctly, the burners will not be able to operate.

7.3 • This trouble is indicated:
On **gas models mechanical version** by the burner ignition reset button, which is lit up.
On **gas models electronic version** via the electronic card.

7.4 • Check also that the neutral registers zero potential when tested. If not, the fault already described in point three of this section will occur. In this eventuality, consult the installer of the building's electrical system.

8 • WATER AND DRAIN CONNECTIONS

8.1 • WATER PRESSURE

The pressure of the water in the network must be between 200 and 500 kPa, as already stated under the heading *"Technical Data"*. If the supply pressure is higher than this, a pressure reduction valve must be installed between the oven and the main.

8.2 • WATER CONNECTIONS TO THE BOILER (IF APPLICABLE) AND VAPORIZER

The water supplied to the vaporizer must be either cold and softened or hot (max 50 °C), as described below. The water connection is R 3/4". The hose for connection to the water supply must be provided by the installer. A shutoff valve must be installed on the line between the oven and the supply.

8.3 • WATER SPECIFICATIONS

The characteristics of the water must come within the limits given below, in order to prevent both corrosion, which is extremely damaging for the appliance, due to supplying water that is too softened or too aggressive, and scaling in the oven and in the water system in the case of supplying water that is too hard.

Hardness: **between 3° and 6° TH**
PH: **greater than 7.5**
Chlorides: **less than 30 ppm**

These values are important for ensuring that the water used by the appliance is suitably treated!

8.4 • WATER CONNECTIONS FOR CONDENSING STEAM

The water used for condensing steam need not be softened, but must necessarily be cold. The water connection is R 3/4". The hose for connection to the water supply must be provided by the installer. A shutoff valve must be installed on the line between the oven and the supply.

8.5 • DRAINING

The water is drained off by gravity through a heat-resistant pipe **DN 50** (not flexible), maximum length 2 m, installed at an angle of no less than 4°.
Mean temperature of the drain water: 65 °C.

Fig. 1

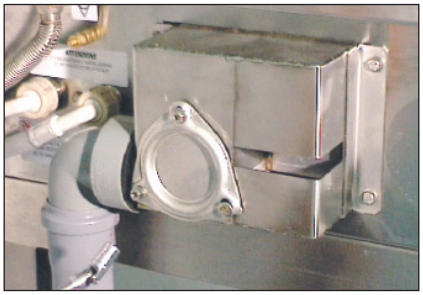

For the range with the drain as per fig.1 it is possible to make a direct connection with an air trap, without fitting a drain cup, as the drainage manifold system has an internal air drop (Fig. 2).
With a drain on the floor without an air trap it is necessary to have an outlet clearance of 2 cm (Fig. 3).

Fig. 2

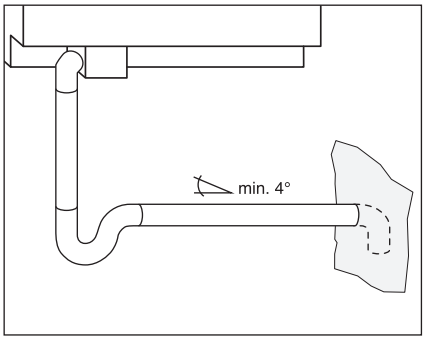

Fig. 3

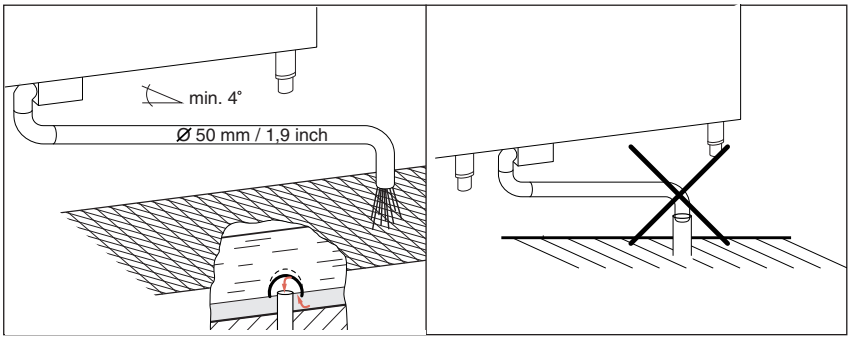

For the remaining models it is imperative to fit a drain cup to ensure a minimum air drop of 25 mm. between the appliance's plastic drain elbow and drain line. **A direct connection is not permissible.**

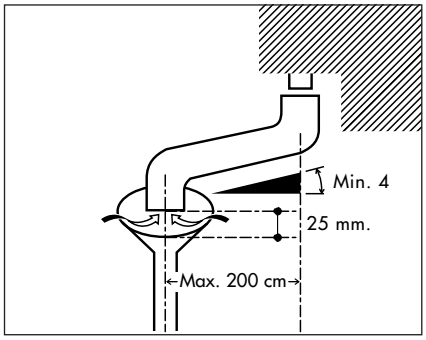

WARNING:

The drain line must be outside the perimeter of the oven.
It is prohibited to reduce the drain diameter.

9 • VENTS

9.1 • Under no circumstances must vents A and B be shut, blocked or ducted into other pipes.

A - Vent to extract vapours from the oven
B - Safety vent

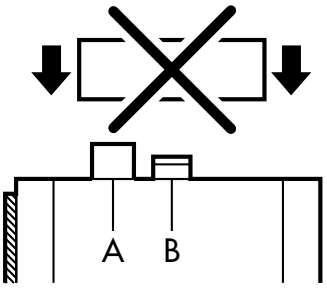

10 • GAS CONNECTION PROCEDURES

10.1 • GAS CONNECTION

The section of the gas supply pipe must be chosen according to the type of gas and the consumption of the appliance to be connected. The system must be designed and installed in accordance with current regulations. **The gas connection on the oven is R 1/2" or R 3/4", and this section must never be reduced**.

A fast acting shutoff valve must be installed on the gas inlet line to the oven. The valve must be type test approved in accordance with current regulations.

The connection to the gas main can be permanent or detachable; if flexible metal tube is used, this should be made of a stainless and corrosion resistant material (rubber hose is not recommended).

If when making the connection you use any sealing materials, they must be type test approved for this purpose.

10.2 • LEAK TEST

All connections between the mains and the appliance must be tested for leakage. The recommended method is to use a proprietary leak detection spray; alternatively, a non-corrosive foamy liquid of any general description can simply be brushed onto the fittings: whichever method is used, no bubbles should appear.

Never under any circumstances test for gas leaks with a naked flame!

10.3 • EXHAUSTING FLUE GASES

Model with 5, 6 and 7 pans GN 1/1

Since this appliance due to its capacity has installation type A3, it is not necessary to connect it to a stack for extracting the flue gases. The flue gases can be exhausted into the installation room. It is especially important to have good, continuous ventilation!

Remaining models

As these ovens have a power rating of >14 kW, type B installation is required. The installer must select one of the methods described below, according to the design of the building and of the room where the appliance is sited. The diameter of the flue pipes must be as indicated in the installation diagrams.

Warning:
flue gases may reach temperatures of 400 °C!

Fumes must never be ducted away utilizing an extraction system!

Clear the gas supply system of any machining debris before connecting the oven!

Installation type B13

Extraction with natural draught **fitted with a damper** and a heat-resistant pipe (see "Flue gas temperatures" in Table 4 under the heading *"Technical Data"*) connected to the stack. Never under any circumstances must flue gases be ducted away directly utilizing a mechanical extraction system. Selecting this type of installation the oven must be fitted with a damper that is specific for each oven (as shown in the drawing).

If the oven is equipped with an adaptor collar for standard size flue pipes, fit the adaptor.

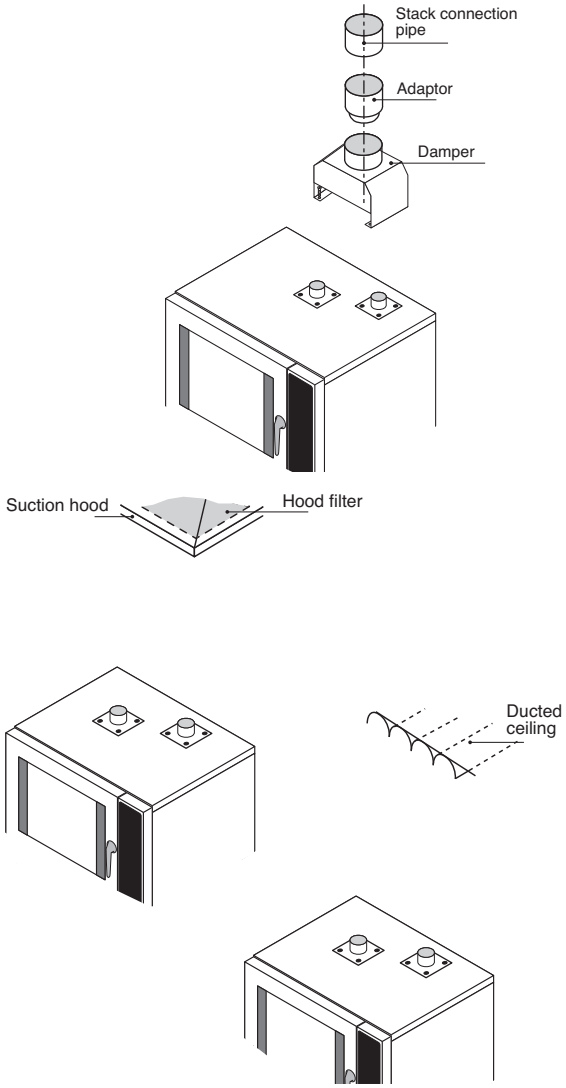

Note: *It is the installer's responsibility to ensure that the flue extension pipe has been correctly and securely fitted.*

Note: *From the floor to the top limit of the flue gas extraction pipe (extension) there must be a minimum distance of 1.80 m.*

Where extraction systems are selected for type B13 and B23 installations, these must be properly sized and specified with at least one interlock device that will shut off the gas supply to the oven automatically in the event of the extractor system failing to operate.

After installation, the installer must update the data plate by ticking the box, corresponding to the type of installation made, with an indelible marker pen.

A3 ☐	**B13 ☒**	**B23 ☐**

The manufacturer accepts no liability for any damage or malfunctioning of the appliance attributable to the absence or inadequacy of earthing systems, to the incorrect arrangement or installation of auxiliary systems, also to incorrectly made connections or to non-compliance of the building's electrical system with current regulations.

11 • OPERATING AT THE RATED HEAT OUTPUT

11.1 • All appliances, during final testing in the factory, are fitted for the type of gas shown on the sticker next to the data plate. Should the appliance fitting not correspond to the family of gases available on location, the appliance must be converted to adapt to the type of gas available. If conversion is necessary, then you must inform Lainox Customer Service and refer to the technical manual.

11.2 • Commissioning of the appliance to operate at the rated heat output is dependent on the inlet pressure and calorific value of the gas and the correct amount of primary air.

11.3 • The inlet pressure required for the appliance to operate with the various types of gas typically available will be within the limits indicated in table 6 of the *"Tecnical gas data"* booklet.
The appliance must not be commissioned if inlet pressure values are outside these limits. If pressures differ from those indicated in Table 6, the gas supply company or agency should be contacted, or alternatively the contractor by which the system was installed in the building.

11.4 • The lower calorific value of the gas can be checked with the supply company or agency, and should comply with the information given in table 5 of the *"Tecnical gas data"* booklet.

11.5 • MEASURING THE INLET PRESSURE
The inlet pressure is measured using a manometer connected to the pressure tap (3) of the gas adjustment valve. To gain access to the valve, the right-hand side casing panel has to be removed.
Before connecting the manometer it is necessary to loosen the screw sealing the pressure tap (3). You then measure the pressure with the burner in operation. The value shown on the manometer must come within the limits given in table 6 "of the *"Tecnical gas data"* booklet.
After checking, carefully close the screw (3).
The sealed screws you can see on the valves must never be tampered with under any circumstances.
Tampering immediately invalidates warranty!

Warning!
The gas system components are fitted for a maximum pressure of 65 mbar. Higher working pressures are not permissible.

CHECKING NOMINAL HEAT CAPACITY
M - P VERSION

- Chamber Burner
Check the depth of the screw **"A"** in accordance with **table 5** of the *"Tecnical gas data"* booklet, using a gauge.

Shift the **J3** jumper in **TEST** position - **see picture**

Check that the burner fan speed, corresponds to the data given in table 5 of the "Technical gas data" booklet.
Set 180 °C convection cooking at low speed (where applicable), otherwise at normal speed.
Check the speed at position "**IGN**", with the **J3** jumper in **TEST** position.

After testing, shift the **J3** jumper in the initial **NORM** position.

Check the speed on position **"MIN"**.
Set the normal speed and check the speed at position **"MAX"**.

Check the combustion, **CO (ppm)** and **CO_2 (%)** values, with an appropriate instrument:
Start the oven in convection mode at 180°C, open the door and tape a magnet to the door switch to close the contact; the oven will restart.
Wait for about 5 minutes.
Position the flue gas collection probe in the flue gas outlet pipe (chamber and boiler).

The **CO_2** must be for:

Natural gas	**between 9% and 10.5%**
L.P.G.	**between 11% and 13%**

The **CO** must be no greater than **300 ppm** (measured).
Carry out the test in both convection and steam mode.
If these readings are outside the ranges, proceed as stated in the technical manual.
For the conversion from natural gas to LPG, or vice versa, proceed as described in the technical manual.

Reading in:
D-E = Hz (0-200Hz)
D-F = V_{DC} (0-6 V_{DC})

- Boiler Burner
Repeat these operations, setting 100 °C steam cooking.

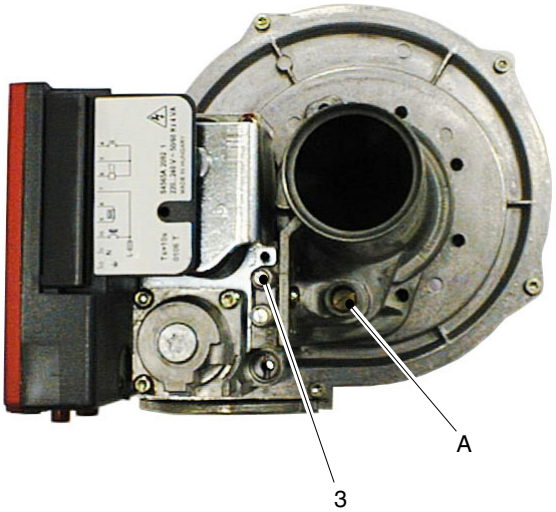

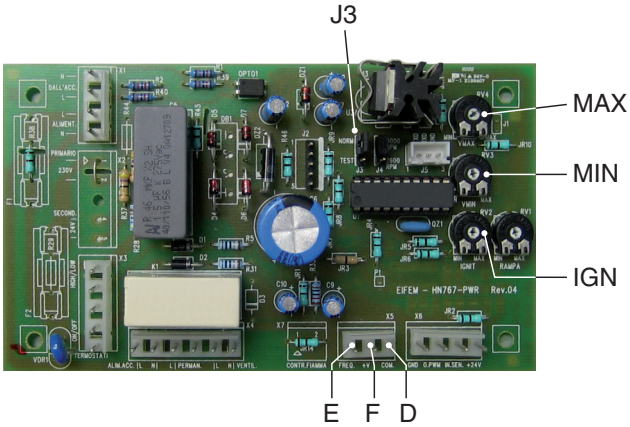

Conversion: As mentioned above, every appliance is factory set to burn the type of gas specified, it may become necessary nonetheless to convert the appliance from one type of gas to another. Therefore, only personnel authorized by the company and belonging to the technical service who have the corresponding technical handbook can do this work.

CHECKING NOMINAL HEAT CAPACITY T VERSION

- Chamber Burner

Check the depth of the screw **"A"** in accordance with **table 5** of the *"Tecnical gas data"* booklet, using a gauge.

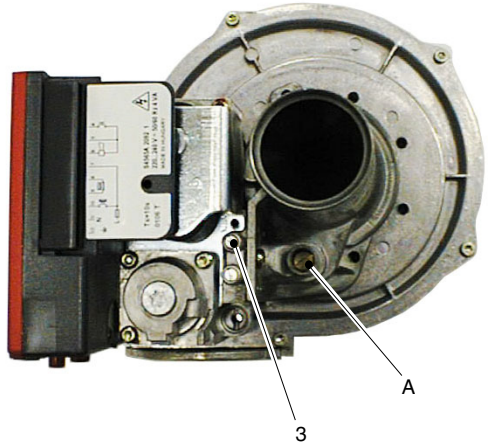

Check that the burner fan speed, corresponds to the data given in table 5 of the *"Technical gas data"* booklet.

Go to the operation screen of the burner that you want to check:

Turn off the oven.
Press **PLUS**. The display will show "MENU PLUS OFF" and the message "MANUAL CLEANING". Turn the knob until the message "SERVICE" appears. Press the knob to confirm.

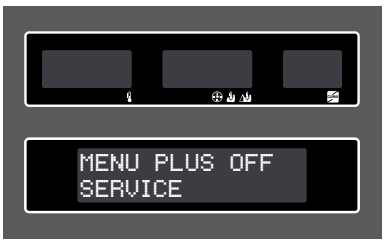

Enter the Password (the password is 123) by turning the knob, and press to confirm.

To select the test for the chamber burners, turn the knob until the relevant burner appears (BRU 1, BRU 2, etc.)

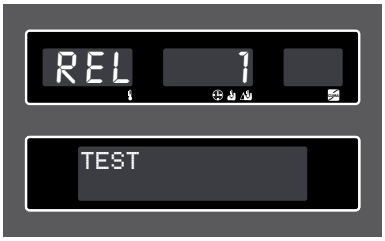

Press **START**

Checking the speed in the "**IGN**" position.
Wait for prepurge

until "**IGN**" appears

Press "Fan" to hold the "**IGN**" speed (the asterisk means that the speed is on hold).
Check the value displayed and then press "Fan" to check the speed in the "**MIN**" position.

Checking the speed in the "**MIN**" position.
When the display shows the "**MIN**" speed

Press Fan to hold the "**MIN**" speed (the asterisk means that the speed is on hold).
Check the value displayed and then press Fan to check the speed in the "**MAX**" position.

Checking the speed in the "**MAX**" position.
When the display shows "**MAX**"

Check the value displayed.

NOTE: When the preset chamber temperature is reached (250 °C) the Burner Test is halted. To continue with the Test you will have to cool down the oven. Open the door and cool the oven with the door open until it stops automatically (at 50 °C).

Check the combustion, **CO (ppm)** and **CO2 (%)** values, with an appropriate instrument:

Press CLIMA to enable open-door operation (the door switch is bypassed and the CLIMA button lights up) and start the Chamber 1 burner.
Wait about 5 minutes.
Position the flue gas collection probe in the flue gas outlet pipe (chamber and boiler).

The **CO2** must be for:

Natural gas	**between 9% and 10.5%**
L.P.G.	**between 11% and 13%**

The **CO** must be no greater than **300 ppm** (measured).
Carry out the test in both convection and steam mode.
If these readings are outside the ranges, proceed as stated in the technical manual.
For the conversion from natural gas to LPG, or vice versa, proceed as described in the technical manual.

Follow the same steps for the Chamber 2 burner (if present).

- <u>Boiler Burner</u>
Select the Test for the boiler settings and follow the same procedure described above.

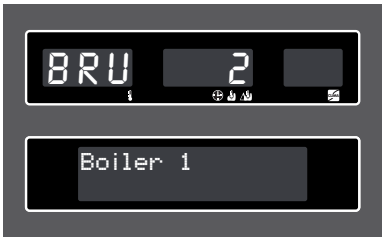

NOTE: It is not necessary to enable open-door operation.

Conversion: As mentioned above, every appliance is factory set to burn the type of gas specified, it may become necessary nonetheless to convert the appliance from one type of gas to another. Therefore, only personnel authorized by the company and belonging to the technical service who have the corresponding technical handbook can do this work.

12 •COMMISSIONING AND TESTING

12.1 • Check the appliance and the entire installation straight after connecting.
Check in particular:
- there are no traces of the protective film on the outside walls and the oven is empty;
- all the vents are clear;
- the connections are made as required and instructed in this handbook;
- all the safety requirements of the current standards, laws and directives are met;
- there is no leakage from the gas and water connections;
- water drainage and flue gas extraction are clear.

12.2 • Now proceed to light the oven as directed in the user manual, checking the smooth ignition of the burner.

12.3 • You should moreover check that the silicone joints and sleeves of the water circuit (oven vent, oven outlet, drip tray) do not leak.

12.4 • Carefully refit the right-hand side that was removed for the above work.

12.5 • For additional certainty that the appliance is operating correctly, carry out a volumetric measurement of the quantity of gas consumed. The meter will show how much gas has been consumed over a given period of time, and this value can be checked against the values given in Table 5 of the *"Tecnical gas data"* booklet.

12.6 • The test report must be completed in full and submitted to the customer, who should then sign in acceptance. With effect from this moment, the appliance is covered by the manufacturer's warranty.

13 • IMPORTANT INFORMATION FOR THE USER

13.1 • With the user manual to hand, show the user the functions, safety devices, appropriate use and, above all, the time intervals for servicing the oven. Maintenance operations include cleaning the burners, inspecting the combustion chamber and cleaning the various ducts and pipes, and should be carried out at least once a year. With this in mind, customers are recommended to sign a service agreement.

13.2 • **Ensure the user is fully aware that such repair and/or maintenance operations as may become necessary over time must be carried out only by a Lainox authorized service agent.**

13.3 • Explain clearly to the user that in the event of breakdown or faulty operation, all connected utilities (water, electricity and gas) should be shut off immediately.

13.4 • Keep the installation manual and the wiring diagram for future reference.
Explain to the user that the user manual supplied with the oven must be kept near the oven in a place where it can be seen. It is good policy to make a note, in the user manual, of the name and contact numbers of the selected Service Agent.

13.5 • Explain to the user that certain faults in operation are often due to simple errors or oversights such as failure to switch on or connect utilities. Accordingly, kitchen staff should be trained in such a way that they can use the appliance confidently and understand how it operates.
Faults of a recurring or persistent nature must be investigated by a Lainox authorized Service Agent.

13.6 • Explain clearly that any alterations to the room or changes in ventilation may affect the operation of gas-fired appliances. In these cases, it is advisable to have the oven functions checked over.

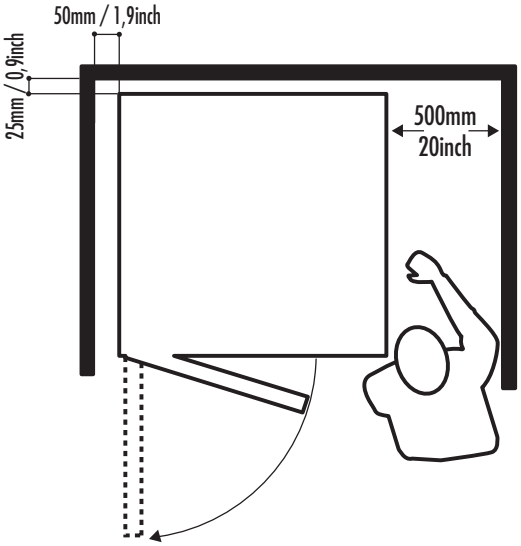

DISTANCES TO OBSERVE

We recommend keeping a distance of 500mm/20inch on the right-hand side in order to carry out maintenance work.

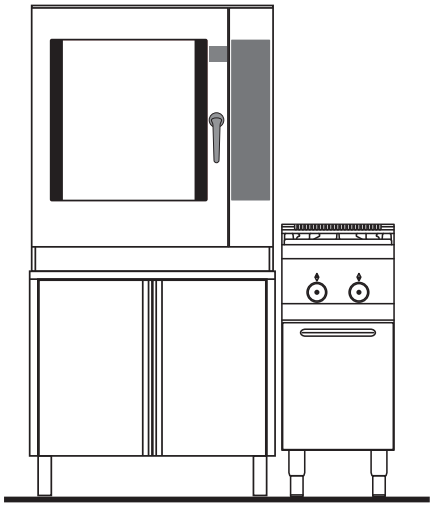

DO NOT INSTALL APPLIANCES WITH A SOURCE OF HEAT ON THE RIGHT-HAND SIDE OF THE OVEN

CAUTION: if the ambient temperature to the right of the appliance is too high, the oven will stop for reasons of safety.

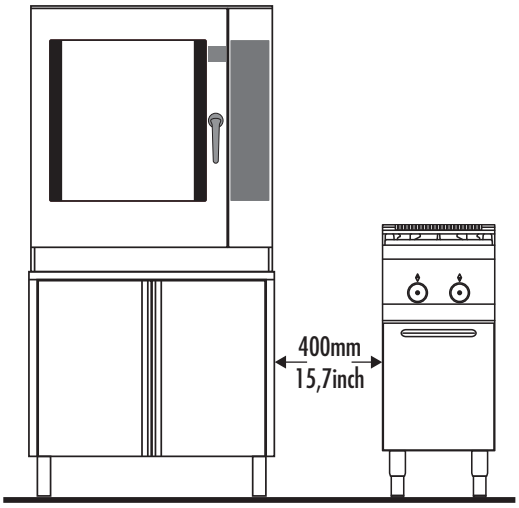

Minimum distance from sources of heat on the right-hand side: 400mm/15,7mm.

NOTES