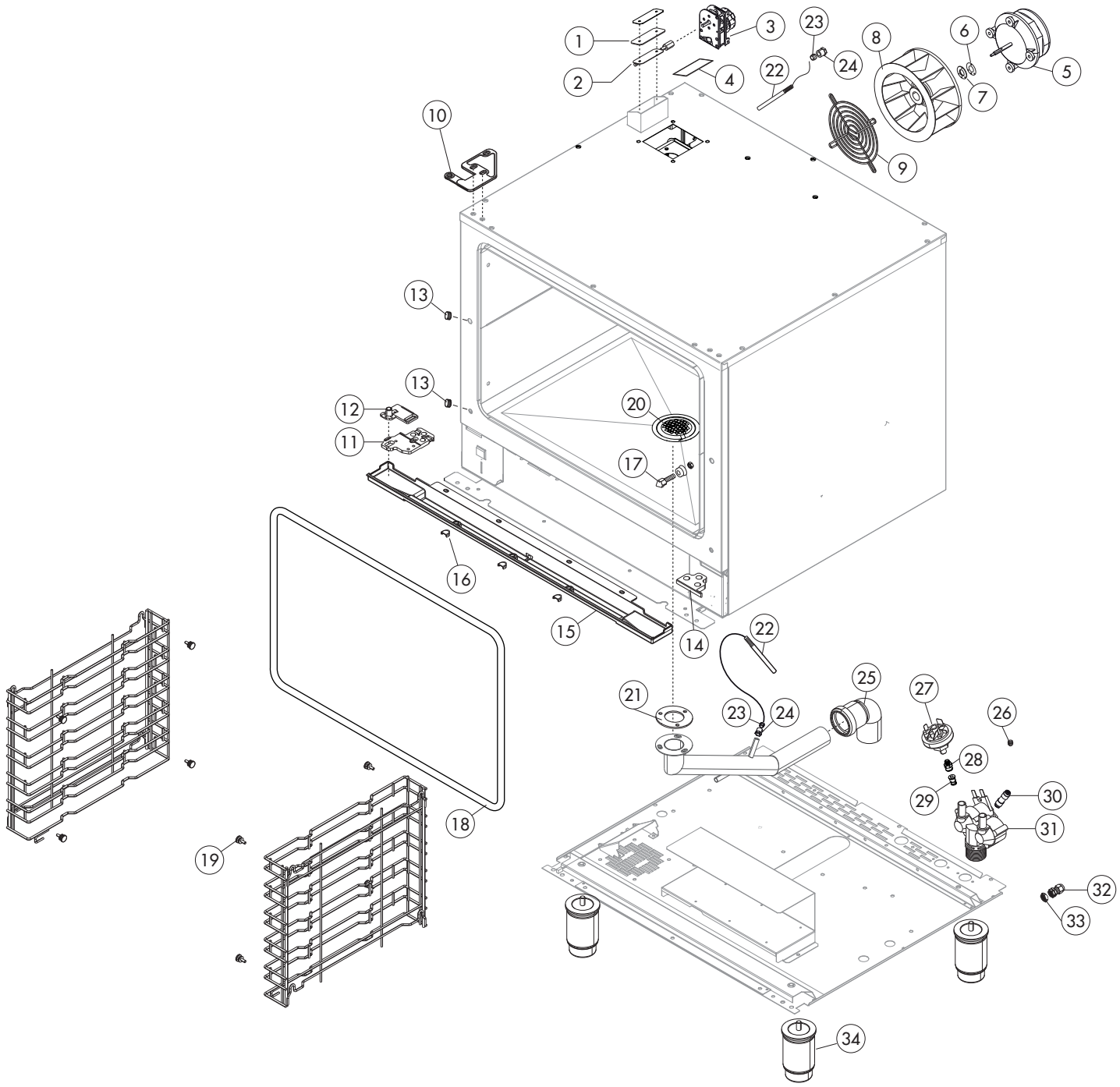

TAV. A

ICGT051

POS.	COD.	Pz.	DESCRIZIONE	DESCRIPTION	DESCRIPTION	BESCHREIBUNG	DESCRIPCIÓN
1	R70050170	1	GUARNIZIONE TUBO SFIATO 80x40	GASKET 80x40	JOINT 80x40	DICHTUNG 80X40	JUNTA 80X40
2	R58007330	1	ASTA FARFALLA SFIATO SERIE ICON 2015	CHAMBER VENT PLATE	ENTFEUCHTUNGSSCHIEBER	DISQUE EVENT	DISCO RESPIRADERO
3	R65090270	1	PROGRAMMATORE V230/50-60Hz	DAMPER SYSTEM	SORTIE EVAPORATION MOUFLE	DAMPFABLASS-STELLMOTOR	MOTOR RESPIRADERO COMPLETO
4	R70050200	1	GUARNIZIONE ESTERNA TUBO SFIATO 80X40	EXTERNAL GASKET 80x40	JOINT 80x40	RINGDICHTUNG 80X40	JUNTA 80X40
5	R65041040	1	MOTORE 1F.125Win-75Wout 2VEL C/COND. FIR	MOTOR 1F.125Win-75Wout	MOTEUR 1F.125Win-75Wout	MOTOR 1F.125Win-75Wout	MOTOR 1F.125Win-75Wout
6	R58005500	1	SEDE PER "TENUTA D.8/22X7" A 04-05	MOTOR GASKET BRASS FLANGE	BRIDE JOINT MOTEUR	FLANSCH F. MOTORDICHTUNG	BRIDA JUNTA MOTOR
7	R70020020	1	GUARNIZIONE DI TENUTA A 04 BAD40 8X22	OR GASKETS	JOINT	RINGDICHTUNG	JUNTA
8	R75400410	1	VENTOLA D.180X77/12 50 HZ P.D.	FAN D.180X77/12 50 HZ P.D.	TURBINE D.180X77/12 50 HZ P.D.	LUEFTERRAD D.180X77/12 50 HZ P.D.	PALA VENTILADOR D.180X77/12 50 HZ P.D.
9	R75300160	1	GRIGLIA VENTILATORE D.180	FAN GUARD GRID D.180	GRILLE VENTILATEUR D.180	VENTILATORSCHUTZGITTER D.180	REJILLA VENTILADOR D.180
10	R58007250	1	CERNIERA SUPERIORE PIANA SERIE ICON 2015	UPPER DOOR HINGE ICON 2015	CHARNIERE SUPERIEURE PORTE ICON 2015	OBERES SCHARNIER ICON 2015	BISAGRA SUPERIOR ICON 2015
11	R58007260	1	CERNIERA INFERIORE PIANA SERIE ICON 2015	LOWER DOOR HINGE ICON 2015	CHARNIERE INFERIEURE PORTE ICON 2015	UNTERES SCHARNIER ICON 2015	BISAGRA INFERIOR ICON 2015
12	R58007280	1	PERNO CERNIERA PORTA DX SERIE ICON 2015	HINGE PIN ICON 2015 - RIGHT DOOR	CHEVILLE CHARNIERE ICON 2015 - PORTE DX	SCHARNIERSTIFT ICON 2015 - TUR DX	PERNO BISAGRA ICON 2015 - PUERTA DX
12	R58007290	1	PERNO CERNIERA PORTA SX SERIE ICON 2015 - PORTA CONTRARIA	HINGE PIN ICON 2015 - LEFT DOOR	CHEVILLE CHARNIERE ICON 2015 - PORTE SX	SCHARNIERSTIFT ICON 2015 - TUR SX	PERNO BISAGRA ICON 2015 - PUERTA SX
13	R69130570	2	TAPPO CHIUDIFORO D.8,5-14,5	COVER D.8,5-14,5	BOUCHON D.8,5-14,5	ABDECKUNG D.8,5-14,5	TAPON D.8,5-14,5
14	R58007270	1	TAMPONAM.CERNIERA INF.SERIE ICON 2015	CLOSING PLATE LOWER DOOR HINGE ICON 2015	TÔLE DE FERMETURE CHARNIERE INFERIEURE PORTE ICON 2015	VERSCHLUBLEISTE UNTERES SCHARNIER ICON 2015	PLACA DE CIERRE BISAGRA INFERIOR ICON 2015
15	R69180260	1	BACINELLA SCARICO FORNO ICON 2015	DRIP TRAY - ICON 2015	PLATEAU D'ÉGOUTTEMENT - ICON 2015	WASSERTROPFTASSE - ICON 2015	BANDEJA DEL GOTEO - ICON 2015
16	R69180310	3	TAPPO VITE BACINELLA SCARICO ICON 2015	COVER	BOUCHON	ABDECKUNG	TAPON
17	R69010260	1	NASELLO 1 STEP	DOOR LATCH 1 STEP	GACHE DE PORTE POUR OUVERTURE SIMPLE	SCHLIESSNASE 1 STUFE	NARIZ 1 CIERRE
18	R70044350	1	TELAIO GUARN. PORTA AP 05	FRONT GASKET	JOINT FACADE	DICHTUNG DER FRONTSEITE	JUNTA FRONTAL
19	R58007340	8	PERNO SUPP. PARATIE A FILO M5 ICON 2015	SIDE RUNNERS SUPPORT	SUPPORT GLISSIERES	BOLZEN AUFLAGESCHIENEN	PERNO PARATIA
20	R10201700	1	ASS. FILTRO DI SCARICO D.76/44.5 M/106-11	DRAIN FILTER	FILTRE ENCEINTE	ABFLUSSFILTER	FILTRO DESAGUE
21	R70010140	1	GUARNIZIONE SILICONE ROSSO 76x40,3x3	RED GASKET 76x40,3x3	ROUGE JOINT 76x40,3x3	ROTEN DICHTUNG 76x40,3x3	JUNTA ROJA 76x40,3x3
22	R65320220	2	SONDA "K" 6X80 1,5ML. TESTA RASTREM. 20mm	PROBE "K" 6X80 1,5ML.	SONDE "K" 6X80 1,5ML.	FUEHLER "K" 6X80 1,5ML.	SONDA "K" 6X80 1,5ML.
23	R62070023	2	BICONO PILOTA TUBO D.6	BICONE D.6	BICONE D. 6	KEGEL D.6	BICONO D.6
24	R62060223	2	DADO PILOTA TUBO D.6	NUT D.6	ECROU D. 6	MUTTER D.6	DADO D.6
25	R62280028	1	CURVA C/MORSET. HTS-HTSW X TUBO D.40 D.40X	CURVE WITH TERMINAL	COURBE AVEC BORNIER	KURVE MIT KLEMM	CURVA CON REGLETERA
26	R65110500	1	REGOL. PORTATA MARRONE 8Lt/h	8 LT/H WATER FLOW REDUCER	REGULATUER DE DEBIT 8 LT.	DURCHFLUSSMONDERER 8L/STD.	REGULADOR DE CAUDAL 8 LT.
27	R63070050	1	PRESSOSTATO 1/8" 0,5-0,35 BAR PH/91140	WATER SAFETY PRESSURE SWITCH	INT.A PRESSION SEC.-EAU	WASSER-DRUCKWACHTER	PRESOSTATO AQUA
28	R62030113	1	MANICOTTO RIDUZ. FF 1/8-1/4 OTTONE	REDUCTION COUPLING	MANCHON REDUCTION	REDUZIERMUFFE	MANGUITO REDUCCION
29	R62090508	1	RACC. TERMIN. DIR. FIL.CON.10X1/4	10X1/4 STRAIGHT THREADED TERMINAL PIPE FITTING	RACCORDEMENT	ENDVERBINDUNGSSTUCK 10 X 1/4" GESCHNITTEN	RACOR
30	R62090788	1	RIDUZIONE INTER.DRITTA ø10-ø6	REDUCTION PIPE FITTING	RACCORD DROIT REDUCTION	GERADE ANSCHLUSS-VERKLEINERUNG	RACOR DERECHO REDUCCION
31	R65110230	1	E.V. 2VIE 1P+1D 220V/50HZ CON ATTACC	SOLENOID VALVE 2 VIE 220V 50HZ	ELECTROVANNE 2 VIE 220V 50HZ	MAGNETVENTIL 2 VIE 220V 50HZ	ELECTROVALVULA 2 VIE 220V 50HZ
32	R65240200	1	PRESSACAVO V-TEC 21 NERO	FAIRLEAD	PRESSE CABLE	ZUGENTLASTUNG	PRENSACABLES
33	R65240210	1	CONTRODADO 116/21 N	LOCK NUT	CONTRE-ECROU	MUTTER	CONTRODADO
34	R69070170	4	PIEDE REG.1" 3/4 A304 C/VITE M10X25 PCN	FOOT WITH SCREW M10X25 PCN	PIED AVEC VIS M10X25 PCN	FUSS MIT SCHRAUBE M10X25 PCN	PATA CON TORNILLO M10X25 PCN

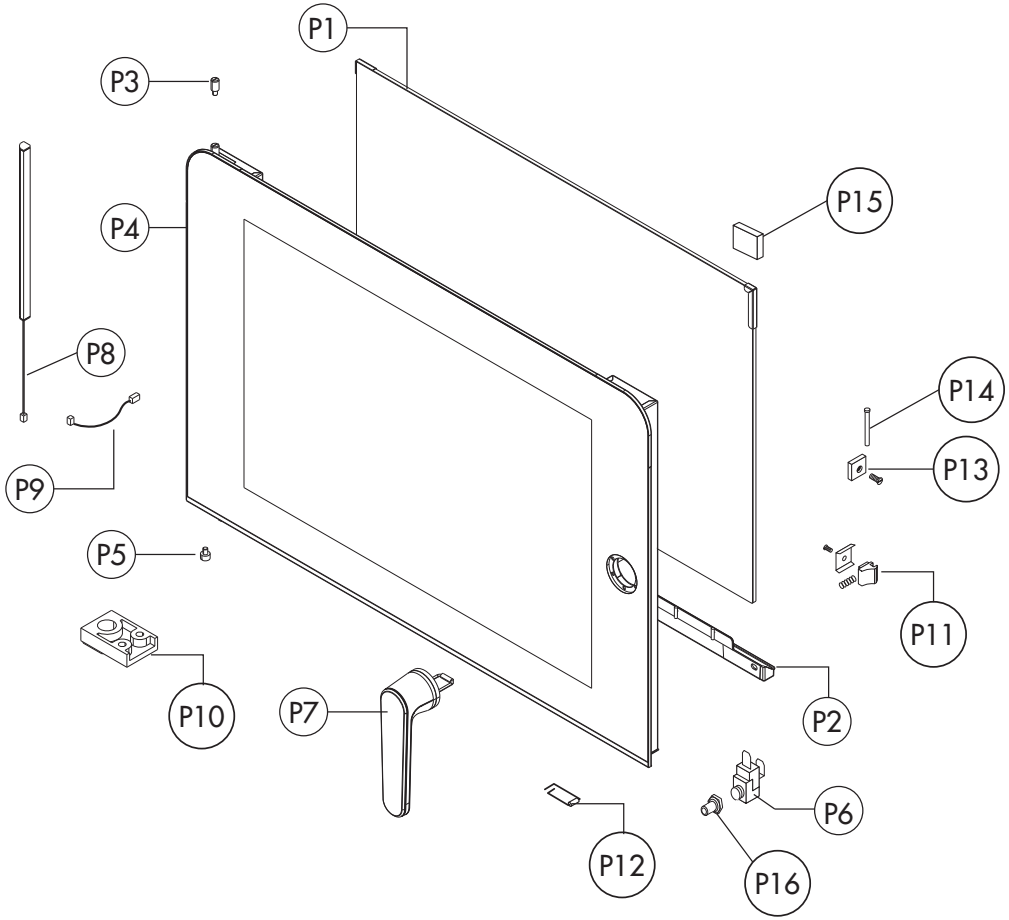

TAV. B

ICGT051

POS.	COD.	Pz.	DESCRIZIONE	DESCRIPTION	DESCRIPTION	BESCHREIBUNG	DESCRIPCIÓN
PORTA / DOOR / PORTE / TÜR / PUERTA							
P1	R71201990	1	VETRO POST. PORTA REP 044 700x480x6	DOOR GLASS 700x480x6	VITRE PORTE 700x480x6	HARTGLASS 700x480x6	VIDRIO PUERTA 700x480x6
P2	R69180270	1	BACINELLA PORTA DX ICON 2015	DRIP TRAY DX ICON 2015 - RIGHT DOOR	PLATEAU D'ÉGOUTTEMENT DX ICON 2015	WASSERTROPFTASSE DX ICON 2015	BANDEJA DEL GOTEO DX ICON 2015
P2	R69180280	1	BACINELLA PORTA SX ICON 2015	DRIP TRAY SX ICON 2015 - LEFT DOOR	PLATEAU D'ÉGOUTTEMENT SX ICON 2015	WASSERTROPFTASSE SX ICON 2015	BANDEJA DEL GOTEO SX ICON 2015
P3	R58007310	1	FERMO SUPERIORE PORTA SERIE ICON 2015	UPPER DOOR CATCH KIT ICON 2015	ENSEMBLE ARRET PORTE ICON 2015	VERSCHLUSSATZ ICON 2015	KIT FIJACION SUPERIOR PARA PUERTA ICON 2015
P4	R17107690	1	PORTA COMPLETA LAINOX ICON 051	DOOR ASSEMBLY LAINOX ICON 051	PORTE COMPLETE LAINOX ICON 051	TUER KOMPLETT LAINOX ICON 051	PUERTA COMPLETA LAINOX ICON 051
P4	R17108310	1	PORTA COMPLETA ALPHATECH ICON 051	DOOR ASSEMBLY ALPHATECH ICON 051	PORTE COMPLETE ALPHATECH ICON 051	TUER KOMPLETT ALPHATECH ICON 051	PUERTA COMPLETA ALPHATECH ICON 051
P4	R17108320	1	PORTA COMPLETA NEUTRA ICON 051	DOOR ASSEMBLY NEUTRA ICON 051	PORTE COMPLETE NEUTRA ICON 051	TUER KOMPLETT NEUTRA ICON 051	PUERTA COMPLETA NEUTRA ICON 051
P4	R17108680	1	PORTA COMPLETA ALPHATECH NEUTRA ICON 051	DOOR ASSEMBLY ALPHATECH NEUTRA ICON 051	PORTE COMPLETE ALPHATECH NEUTRA ICON 051	TUER KOMPLETT ALPHATECH NEUTRA ICON 051	PUERTA COMPLETA ALPHATECH NEUTRA ICON 051
P4	R17108470	1	PORTA CONTRARIA COMPLETA LAINOX ICON 051	DOOR ASSEMBLY LAINOX ICON 051- LEFT DOOR	PORTE COMPLETE LAINOX ICON 051	TUER KOMPLETT LAINOX ICON 051	PUERTA COMPLETA LAINOX ICON 051
P4	R17108500	1	PORTA CONTRARIA COMPLETA ALPHATEC ICON 051	DOOR ASSEMBLY ALPHATECH ICON 051- LEFT DOOR	PORTE COMPLETE ALPHATECH ICON 051	TUER KOMPLETT ALPHATECH ICON 051	PUERTA COMPLETA ALPHATECH ICON 051
P4	R17108530	1	PORTA CONTRARIA COMPLETA NEUTRA ICON 051	DOOR ASSEMBLY NEUTRA ICON 051 - LEFT DOOR	PORTE COMPLETE NEUTRA ICON 051	TUER KOMPLETT NEUTRA ICON 051	PUERTA COMPLETA NEUTRA ICON 051
P4	R17108710	1	PORTA CONTRARIA COMPLETA ALPHATECH NEUTRA ICON 051	DOOR ASSEMBLY ALPHATECH NEUTRA ICON 051- LEFT DOOR	PORTE COMPLETE ALPHATECH NEUTRA ICON 051	TUER KOMPLETT ALPHATECH NEUTRA ICON 051	PUERTA COMPLETA ALPHATECH NEUTRA ICON 051
P5	R58007320	1	FERMO INFERIORE PORTA SERIE ICON 2015	LOWER DOOR CATCH KIT ICON 2015	ENSEMBLE ARRET PORTE ICON 2015	VERSCHLUSSATZ ICON 2015	KIT FIJACION INFERIOR PARA PUERTA ICON 2015
P6	R65260540	1	MICRO PORTA	DOOR SWITCH	MICRO PORTE	TUERSCHALTER	MICRO PUERTA
P7	R69010900	1	GRUPPO CHIUSURA COLORE NERO ICON 2015 - PORTA LAINOX E NEUTRA	DOOR CATCH KIT ICON 2015 - DOOR LAINOX - NEUTRA	ENSAMBLE FERMETURE PORTE ICON 2015 - PORTE LAINOX - NEUTRA	VERSCHLUSSATZ ICON 2015 - TUER LAINOX - NEUTRA	MANIJA DE LA PUERTA ICON 2015 - PUERTA LAINOX - NEUTRA
P7	R69010930	1	GRUPPO CHIUSURA BIANCO OPACO ICON 2015 - PORTA ALPHATECH	DOOR CATCH KIT ICON 2015 - DOOR ALPHATECH	ENSAMBLE FERMETURE PORTE ICON 2015 - PORTE ALPHATECH	VERSCHLUSSATZ ICON 2015 - TUER ALPHATECH	MANIJA DE LA PUERTA ICON 2015 - PUERTA ALPHATECH
P8	R65270560	1	LAMPADA LED PROFILO 45° L = 360 mm	LED LIGHT	LAMPE	LAMPE	LAMPARA
P9	R66605970	1	CAVO PROLUNGA X LED L=100MM	CABLE	CABLE	KABEL	CABLE
P10	R58007300	1	BLOCCHETTO INF. PORTA SERIE ICON 2015	LOWER DOOR ASSEMBLY	ENSEMBLE PORTE INFERIEURE	UNTERES TURBEFSTIGUNG	BLOQUE PUERTA INFERIOR ICON 2015
P11	R58001780	1	FERMO VETRO PORTA P2000	INNER GLASS CATCH KIT	ENSEMBLE ARRET VERRE INTERIEUR	VERSCHLUSSATZ F. INNENSCHEIBE	KIT FIJACION VIDRIO INTERNO
P12	R61620132	1	MOLLA AGGANCIO NASELLO	DOOR LOCK SPRING	RESSORT DE FERMETURE PORTE	TÜR SCHLUSSFEDER	MUELLE DE ENGANCHE A TRINQUET
P13	R58001760	2	CERNIERA FISSA VETRO SR2000	INNER GLASS SOLID HINGE	CHARNIERE VERRE INTERIEUR	SCHARNIER F. INNENSCHEIBE	BISAGRA FIJA VIDRIO INTERNO
P14	R58001770	2	PERNO CERNIERA VETRO SR2000	INNER GLASS HINGE PIN	PIVOT CHARNIERE VERRE INTERIEUR	SCHARNIERBOLZEN F. INNENSCHEIBE	PERNO BISAGRA VIDRIO INTERNO
P15	R70050180	6	DISTANZIALE VETRO 15x8 SIL.55SH M4x12 A2	THICKNESS	EPAISSEUR	DICKE	ESPESOR
P16	R58001860	1	PERNO SUPP. PARATIE ALPHATECH	SIDE RUNNERS SUPPORT	SUPPORT GLISSIERES	BOLZEN AUFLAGESCHIENEN	PERNO PARATIA

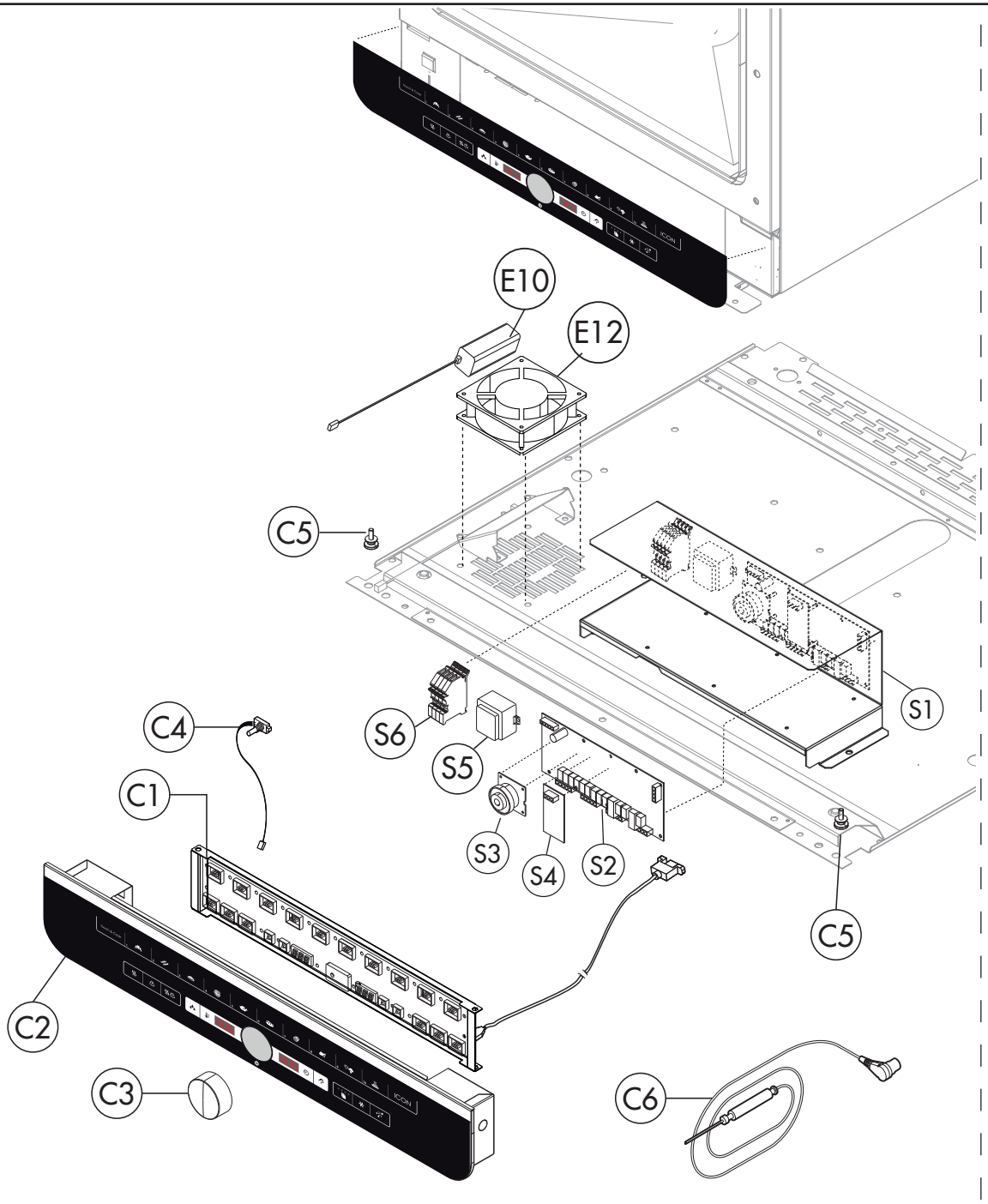
E10
E12
C5
S1
S6
S5
C4
C1
S3
S4
S2
C5
C2
C3
C6

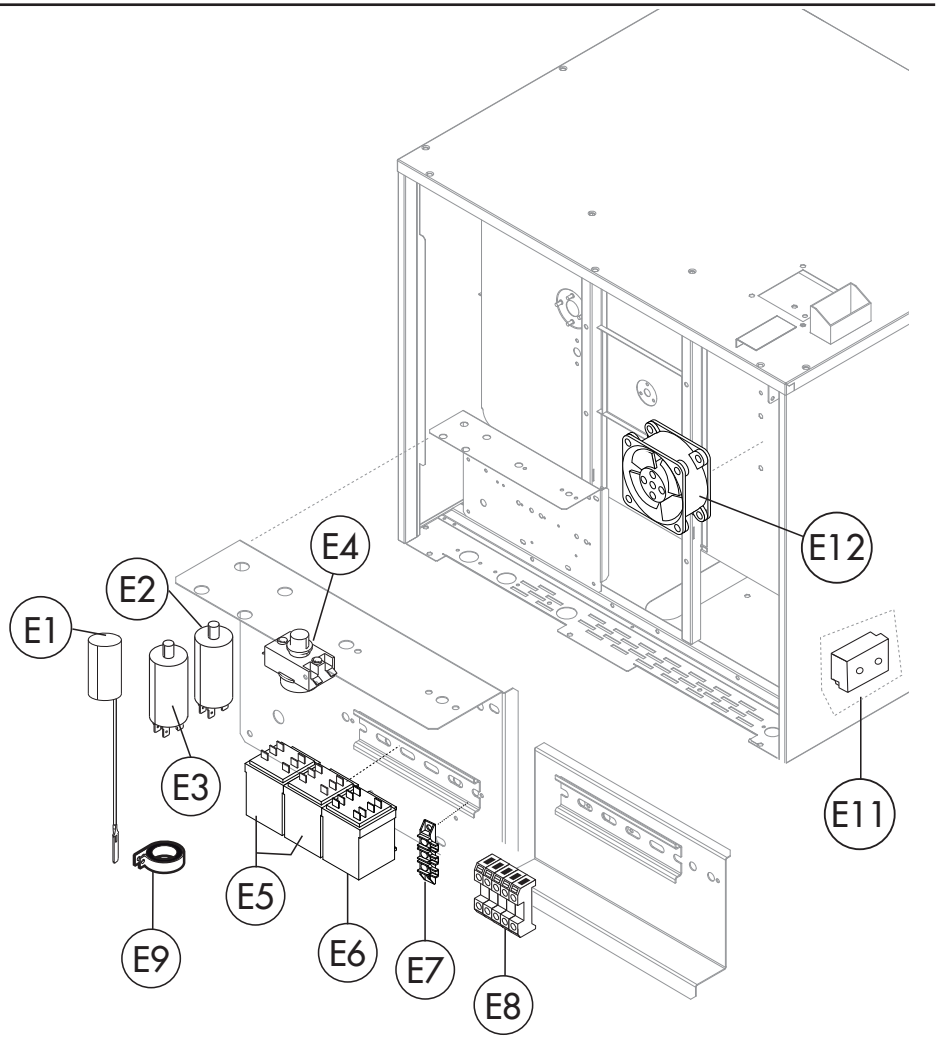
E12
E4
E2
E1
E3
E11
E5
E6
E7
E9
E8

POS.	COD.	Pz.	DESCRIZIONE	DESCRIPTION	DESCRIPTION	BESCHREIBUNG	DESCRIPCIÓN
CRUSCOTTO ELETTRICO / ELECTRONIC CONTROL PANEL / CONTRÔLE ÉLECTRONIQUE / ELEKTRONISCHE STEUEREINHEIT / PANEL DE CONTROL							
C1	R65302660	1	SCHEDA TASTIERA TOUCH ICON 2015 + CAVO	REALY PC BOARD ICON 2015 + CABLE	FICHE PANNEAU COMMANDES ICON 2015	TASTAURPLATINE ICON 2015	PLACA PULSADORES ICON 2015
C2	R17410690T1	1	CRUSCOTTO + VETRO IC_T051 - 71 - 101 LAINOX	DISPLAY + GLASS IC_T051-71-101 LAINOX	DISPLAY + VITRE IC_T051-71-101 LAINOX	DISPLAY + GLASS IC_T051-71-101 LAINOX	DISPLAY + VIDRIO IC_T051-71-101 LAINOX
C2	R17410690T1A	1	CRUSCOTTO + VETRO IC_T051 - 71 - 101 ALPH-NEUTRO	DISPLAY + GLASS IC_T051-71-101 ALPH-NEUTRO	DISPLAY + VITRE IC_T051-71-101 ALPH-NEUTRO	DISPLAY + GLASS IC_T051-71-101 ALPH-NEUTRO	DISPLAY + VIDRIO IC_T051-71-101 ALPH-NEUTRO
C3	R69030340	1	MANOPOLA ICON 2015	KNOB KIT ICON 2015	POIGNEE COMMANDE ICON 2015	DREHKNOPF ICON 2015	PULSADOR MANETA ICON 2015
C4	R65302720	1	ENCODER + CAVO ICON	ENCODER + CABLE	ENCODER + CABLE	ENCODER + KABEL	ENCODER + CABLE
C5	R69010990	2	MANOPOLA M4 FISSAGGIO CRUSCOTTI ICON	DISPLAY SCREW	VIS DE BLOCAGE DISPLAY	SCHRAUBE FÜR DISPLAY	TORNILLO FIJACION DISPLAY
C6	R65321430	1	SONDA AL CUORE K4P ISC04 (6 PIN,PC PLAS.)	CORE TEMPERATURE PROBE	SONDE A COEUR	KERNTEMPERATURFUEHLER	SONDA AL CORAZON
SCHEDA BASE / MAIN PC BOARD / FICHE PANNEAU PRINCIPAL / HAUPTPLATINE / PLACA BASE							
S1	R17108410	1	SCHEDA BASE COMPLETA ICON TOUCH GAS	MAIN PC BOARD ICON 2015	FICHE PANNEAU PRINCIPAL ICON 2015	HAUPTPLATINE ICON 2015	PLACA BASE ICON 2015
S2	R65302670	1	SCHEDA BASE TOUCH ICON 2015	MAIN PC BOARD ICON 2015	FICHE PANNEAU PRINCIPAL ICON 2015	HAUPTPLATINE ICON 2015	PLACA BASE ICON 2015
S3	R65302680	1	SCHEDA BUZZER ICON 2015	PC BOARD BUZZER ICON 2015	SONNERIE PLATINE ICON 2015	PLATINENSUMMER ICON 2015	ZUMBADOR PLACA ELECTRONICA ICON 2015
S4	R65301950	1	SCHEDA ESPANSIONE BRUCIATORI "X" Sr.2006	BOILER CONTROL PC BOARD	FICHE ELECTRON. CONTROLE CHAUDIERE	ESPANSIONSPLATINE	PLACA EXPANSION
S5	R65180420	1	TRASF.RE 20VA 0-220-240/12V	TRANSFORMER 20VA 0-220-240/12V	TRANSFORMATEUR 20VA 0-220-240/12V	TRANSFORMATOR 20VA 0-220-240/12V	TRANSFORMADOR 20VA 0-220-240/12V
S6	R65210020	4	PORTAFUSIBILE BARRA DIN 5x20	FUSE CARRIER	PORTE-FUSIBLE	SICHERUNGSHALTER	PORTAFUSIBLE
COMPONENTI ELETTRICI / ELECTRONIC COMPONENTS / COMPOSANTS ÉLETRIQUES / ELEKTRISCHE BAUTEILE / COMPONENTES ELÉTRICOS							
E1	R65280240	1	FILTRO	INTERFERENCE SUPPRESSOR	FILTRE ANTIPARASITES	STOERSCHUTZFILTER	FILTRO
E2	R65190080	1	CONDENS. 5µF V425-B C/CAP.C/COD.	CAPACITOR 5µF	CONDENSATEUR 5µF	KONDENSATOR 5µF	CONDENSADOR 5µF
E3*	R65190240	1	CONDENSATORE 10µF C/USCITA 4 FASTON 6,35	CAPACITOR 10µF	CONDENSATEUR 10µF	KONDENSATOR 10µF	CONDENSADOR 10µF
E4	R65070450	1	TERMOST. SICUR. BIP. 335 ⌀ C NEGAT.	THERMOSTAT	THERMOSTAT	THERMOSTAT	TERMOSTATO
E5	R65170100	2	RELÈ FINDER	RELAY	RELAIS	RELAIS	RELE
E6*	R65170170	1	RELE' FINDER CONT. SCAMB.	RELAY	RELAIS	RELAIS	RELE
E7	R65220330	1	MORSETTO 3 POLI A VITE	TERMINAL	BORNE	KLEMME	REGLETA
E8	R65220280	1	MORSETTIERA MONOFASE C/TERRA PASSANTE	TERMINAL BOARD	BORNIER	KLEMMLEISTE	REGLETERA
E9	R65280490	1	FERRITE TOROIDALE FT36	FERRITE FT36	FERRITE FT36	FERRIT FT36	FERRITA FT36
E10	R65187220	1	ALIMENTATORE APV-12-24	POWER SUPPLY	BLOC D'ALIMENTATION	NETZTEIL	ADAPTADOR DE CORRIENTE ALTERNA
E11	R65180260	1	TRASF. ACCENS.	IGNITION TRANSFORMER	TRANSFORMATEUR D'ALLUMAGE	ZÜNDTRANSFORMATOR	TRANSFORMADOR DE ENCENDIDO DESDE
E12	R65060050	2	VENTILATORE COMPATTO D.120	COMPONENTS VENTILATION MOTOR D.120	MOTEUR DE REFROIDISSMENT D.120	ABKULUNGS MOTOR D.120	MOTOR DE ENFRIAMIENTO D.120

* PER GLI ICGT051 230/1/50 2 VEL - FOR ICGT051 230/1/50 2 VEL - POUR ICGT051 230/1/50 2 VEL - FÜR ICGT051 230/1/50 2 VEL - POR ICGT051 230/1/50 2 VEL

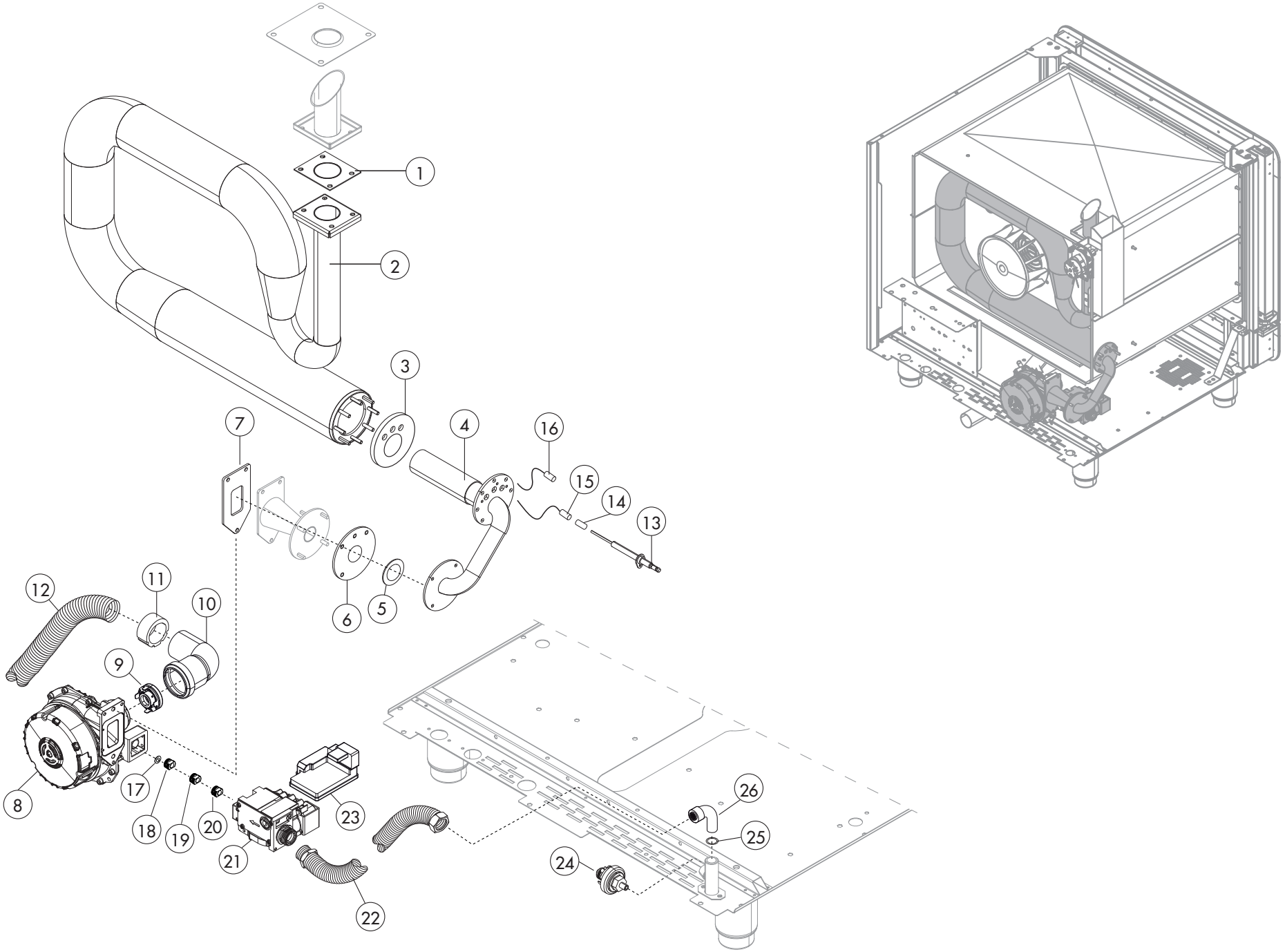

TAV. D

ICGT051

POS.	COD.	Pz.	DESCRIZIONE	DESCRIPTION	DESCRIPTION	BESCHREIBUNG	DESCRIPCIÓN
1	R63140010	2	GUARN. BOIL.- COND. FUMI VM-G/061	OR GASKETS	JOINT	RINGDICHTUNG	JUNTA
2	R18211220	1	ASS. SCAMBIATORE CAM.B/PG/044	HEAT EXCHANGER ACCESSORIES INCLUDED	ECHANGEUR CHALEUR ET ACCESSOIRES	WÄRMETAUSCHER KOMPLETT MIT ZUBEHÜR	INTERCAMBIADOR COMPLETO CON ACCESORIOS
3	R63140070	2	GUARNIZIONE SCAMB.-BRUC. De.84 9kW	BURNER/HEAT EXCHANGER GASKET	JOINT BRULEUR / ECHANGEUR CALORIFI-QUE	DICHTUNG BRENNER/WARMETAUSCHER	JUNTA QUEMADOR/INTERCAMBIADOR
4	R17202320A	1	ASS.BRUCIATORE CAMERA kW 8.5-10 ICON 051 2015	COOKING CABINET BURNER kW 8.5-10 ICON 051 2015	BRÛLEUR MOUFLE kW 8.5-10 ICON 051 2015	GARRAUMBRENNER kW 8.5-10 ICON 051 2015	QUEMADOR CAMERA kW 8.5-10 ICON 051 2015
5	R11430360	1	DIAFRAMMA VENTILATORE/BRUCIATORE D.13	ORIFICE D.13	DIAPHRAGME D.13	BLENDE D.13	DIAFRAGMA D.13
6	R63140050	2	GUARN.VENTILATORE - BRUCIATORE	BURNER/FAN MOTOR GASKET	JOINT VENTILATEUR / BRULEUR	DICHTUNG GEBLASE/GASBRENNER	JUNTA VENTILADOR/QUEMADOR
7	R70050190	1	GUARNIZIONE RETTANGOLARE GRUPPO GAS 2015	GASKETS	JOINT	DICHTUNG	JUNTA
8	R65060420	1	GRUPPO GAS K SYSTEM - VENTILATORE	GAS BURNER FAN MOTOR	VENTILATEUR POUR BRULEUR GAZ	VENTILATOR GASBRENNER	VENTILADOR PARA QUEMADOR GAS
9	R65060440	1	GRUPPO GAS K SYSTEM - VENTURI	VENTURI TUBE	VENTURI	VENTURIROHR	VENTURI
10	R62280078	1	CURVA POLYPR. HTB DN50 87,5° DIN EN1451-1	CURVE	COURBE	KURVE	CURVA
11	R70060121	1	MANICOTTO RIDUZIONE De.45,5 Di.35 (PA 6)	REDUCTION COUPLING	MANCHON REDUCTION	REDUZIERMUFFE	MANGUITO REDUCCION
12	R77700056	0,5 m	TUBO FLEX c/Spirale Di.30 De.35,3	GAS INLET FLEXIBLE PIPE	TUBE FLEXIBLE ENTREE GAZ	FLEXROHR GASZULAUF	TUBO FLEXIBLE ENTRADA GAS
13	R63050140	3	CANDELA ACC.A/SM ø9.5 KA1 ø3/M4 Ltot=139	IGNITOR	BOUGIE ALLUMAGE	ZUENDKERZE	BUJIA ENCENDIDO
14	R58001480	3	BOCCOLA FISSAGGIO CANDELETTE	BUSH	DOUILLE	BUSCH	CASQUILLO
15	R66605930	1	CAVO ACC/RIL.CAM./BOIL. L=300 BIANCO	FLAME IGNITION CABLE/FLAME SENSOR CABLE	CABLE ALLUMAGE/CONTROLE FLAME	ZUENDKABEL/FLAMMENUEBERWA-CHUNGSKABEL	CABLE ENCENDIDO/SENSOR
16	R66605140	2	CAVO ACCENS.C/CONNETT.A 90° D.6,3 L=400	FLAME IGNITION CABLE/FLAME SENSOR CABLE	CABLE ALLUMAGE/CONTROLE FLAME	ZUENDKABEL/FLAMMENUEBERWA-CHUNGSKABEL	CABLE ENCENDIDO/SENSOR
17	R70010410	1	GUARNIZIONE OR 10,5 x 1,5 NBR-70 EN549	OR GASKET 10,5 x 1,5	JOINT 10,5 x 1,5	DICHTUNG 10,5 x 1,5	JUNTA 10,5 x 1,5
18	R58007350	1	UGELLO ø3,2 mm	NOZZLE ø3,2 mm	BEC ø3,2 mm	DÜSE ø3,2 mm	BOQUILLA ø3,2 mm
19	R58007360	1	UGELLO ø4,2 mm	NOZZLE ø4,2 mm	BEC ø4,2 mm	DÜSE ø4,2 mm	BOQUILLA ø4,2 mm
20	R58007370	1	UGELLO ø4,4 mm	NOZZLE ø4,4 mm	BEC ø4,4 mm	DÜSE ø4,4 mm	BOQUILLA ø4,4 mm
21	R65060430	1	GRUPPO GAS K SYSTEM - VALVOLA	GAS SOLENOID VALVE	VALVE GAZ	GAS VENTIL	VALVULA GAS
22	R62180122	1	FLEX GAS L=25-50 CM M/F1/2" INOX	GAS INLET FLEXIBLE PIPE	TUBE FLEXIBLE ENTREE GAZ	FLEXROHR GASZULAUF	TUBO FLEXIBLE ENTRADA GAS
23	R63060170	1	PANNELLO ACCENSIONE	BURNER IGNITION PANEL	ALLUMEUR GAZ	ZUENDBOX	PANEL DE ENCENDIDO
24	R63070010	1	PRESSOSTATO PG 901.61	GAS SAFETY PRESSURE SWITCH	INT.A PRESSION SECURITE-GAZ	DRUCKSCHALTER PG	PRESOSTATO GAS
25	R70010030	1	GUARNIZIONE OR 6,07x1,78 SILICONE	OR GASKET 6,07x1,78	JOINT 6,07x1,78	DICHTUNG 6,07x1,78	JUNTA 6,07x1,78
26	R62090733	1	CURVA MF 1/2" OT	CURVE MF 1/2" OT	COURBE MF 1/2" OT	KURVE MF 1/2" OT	CURVA MF 1/2" OT

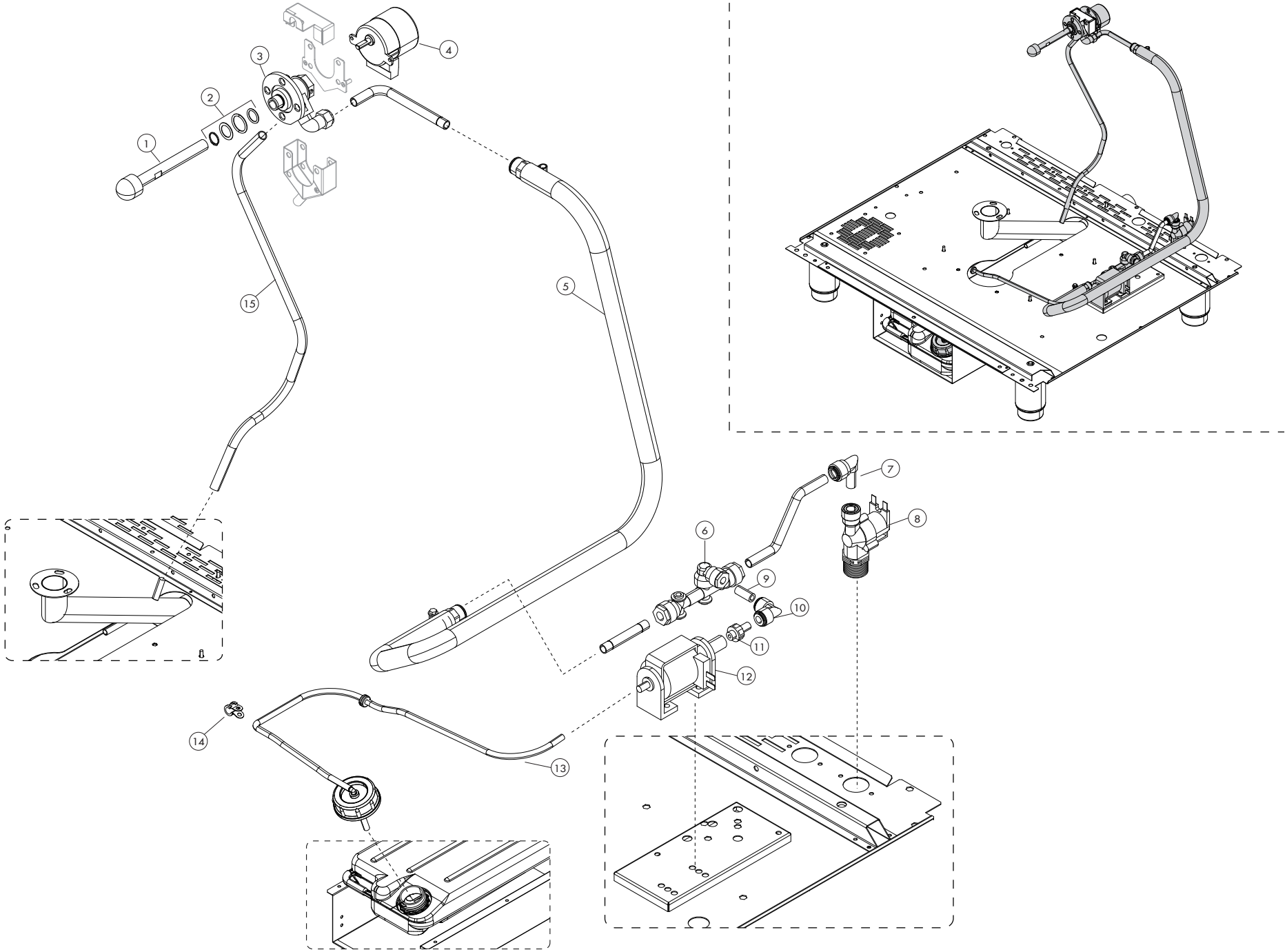

TAV. E

ICGT051

POS.	COD.	Pz.	DESCRIZIONE	DESCRIPTION	DESCRIPTION	BESCHREIBUNG	DESCRIPCIÓN
1	R58007050	1	ALBERO L=110 LAVAGGIO MOB (M_051)	WASHING SYSTEM INNER ASSEMBLY	ENSEMBLE INTERIEUR DU LAVAGE	INNEN WASCHARMBEFSTIGUNG	KIT INTERNO LAVADO
2	R70045120	1	KIT GUARNIZIONI PER LAVAGGIO MOB	GASKETS KIT	ENSEMBLE JOINTS	DICHTUNGSSATZ	KIT JUNTAS
3	R99000160	1	KIT FLANGIA LAVAGGIO MOB	WASHING SYSTEM FLANGE KIT	ENSAMBLE BRIDE BRAS DE LAVAGE	FLANSCH WASCHARMBEFESTINGUNG	KIT PLATINA LAVADO
4	R65090260	1	MOTORID. LAV.	WASHING GEARED MOTORS	MOTO-REDUCTEURS DE LAVAGE	GETRIEBEMOTOREN	MOTORREDUCTORES LAVADO
5	R14171760	1	PREM. TUBO LAV. DETER. ICON 2015	DETERGENT PIPE ICON 2015	TUBE DETERGEANT ICON 2015	REININGER LEITUNG ICON 2015	TUBO DETERGENTE ICON 2015
6	R62090888	1	COLLET. RES. ACET. 3 VIE-2 D.10 + 1D.8 + 2 ANTIRIT	MANIFOLD	COLLECTEUR	KRÜMMER	COLECTOR
7	R62090528	1	RACC.A GOMITO C/CODOLO 10X10	ELBOW PIPE FITTING (WITH TANG) 10 X 10	COURBE AVEC QUEUE 10x10	WINKELVERBINDUNGSSTUCK 10x10 MIT SCHAFT	RACOR DE GOMA CON CODO 10x10
8	R65110320	1	E.V. 1 VIA 230V 50/60 HZ OUT D10	SOLENOID VALVE 1 VIE 230V 50/60 HZ	ELECTROVANNE 1 VIE 230V 50/60 HZ	MAGNETVENTIL 1 VIE 230V 50/60 HZ	ELECTROVALVULA 1 VIE 230V 50/60 HZ
9	R80150020	0,04	TUBO PU 8mm x6 TRASPARENTE	PE D.8mm x6 DETERGENT FLEXIBLE PIPE	TUBE DETERGEANT D. 8x6	ROHRLEITUNG F. REININGER PE D.8mm x6	TUBO DETERGENTE PE D.8mm x6
10	R62090498	1	RACC. INTERMEDIO A GOMITO D.8	ELBOW PIPE FITTING F	COURBE AVEC QUEUE	WINKELVERBINDUNGSSTUCK	RACOR DE GOMA
11	R62090608	1	TERMINALE C/CODOLO 8x1/8"	8X1/8 END SIDE PIPE FITTING (WITH TANG)	RACCORD AVEC QUEUE 8x1/8"	ENDVERBINDUNGSSTUCK 8 X 1/8" MIT SCHAFT	RACOR TERMINAL CON CODO 8x1/8"
12	R65110600	1	POMPA ELETTROM. A PIS. OSC.	POMPE DETERGENT	DETERGEANT PUMP	REINIGERPUMPE	BOMBA DETERGENTE
13	R14171790	1	PREM. TUBO DETERGENTE TANICA N/S101 + ICON	DETERGENT PIPE	TUBE DETERGEANT	ROHRLEITUNG F. REININGER	TUBO DETERGENTE
14	R61630131	1	FASC. STRINGITUBO ZINC. + GOMMA SERIE PK D.80	METAL CLAMPS D.80	COLLIER DE SERRAGE D.80	VERZINKTE SCHELLEN D.80	ABRAZADERA D.80
15	R80120060	1m	TUBO SILIC. TRASP. SR60/TR 7/12	PIPE	TUBE	LEITUNG	TUBO