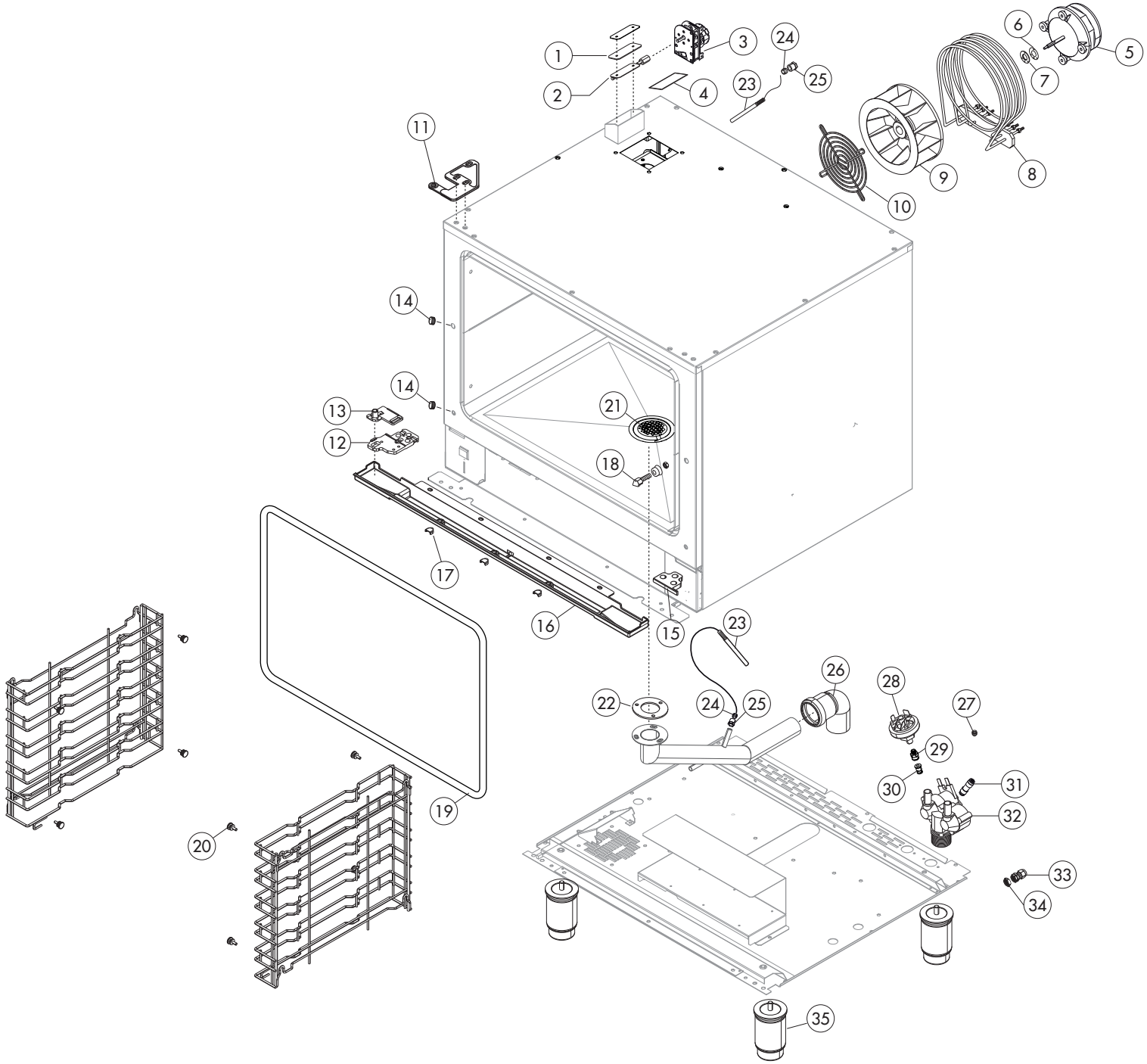

TAV. A

ICET051

POS.	COD.	Pz.	DESCRIZIONE	DESCRIPTION	DESCRIPTION	BESCHREIBUNG	DESCRIPCIÓN
1	R70050170	1	GUARNIZIONE TUBO SFIATO 80x40	GASKET 80x40	JOINT 80x40	DICHTUNG 80X40	JUNTA 80X40
2	R58007330	1	ASTA FARFALLA SFIATO SERIE ICON 2015	CHAMBER VENT PLATE	ENTFEUCHTUNGSSCHIEBER	DISQUE EVENT	DISCO RESPIRADERO
3	R65090270	1	PROGRAMMATORE V230/50-60Hz	DAMPER SYSTEM	SORTIE EVAPORATION MOUFLE	DAMPFABLASS-STELLMOTOR	MOTOR RESPIRADERO COMPLETO
4	R70050200	1	GUARNIZIONE ESTERNA TUBO SFIATO 80X40	EXTERNAL GASKET 80x40	JOINT 80x40	RINGDICHTUNG 80X40	JUNTA 80X40
5	R65041040	1	MOTORE 1F.125Win-75Wout 2VEL C/COND. FIR	MOTOR 1F.125Win-75Wout	MOTEUR 1F.125Win-75Wout	MOTOR 1F.125Win-75Wout	MOTOR 1F.125Win-75Wout
6	R58005500	1	SEDE PER "TENUTA D.8/22X7" A 04-05	MOTOR GASKET BRASS FLANGE	BRIDE JOINT MOTEUR	FLANSCH F. MOTORDICHTUNG	BRIDA JUNTA MOTOR
7	R70020020	1	GUARNIZIONE DI TENUTA A 04 BAD40 8X22	OR GASKETS	JOINT	RINGDICHTUNG	JUNTA
8	R65011790	1	RESISTENZA 7000W 230V C/FASTON CAM. ICON 2015	HEATING ELEMENT 7000W 230V	RESISTANCE 7000W 230V	HEIZKOERPER 7000W 230V	RESISTENCIA 7000W 230V
9	R75400410	1	VENTOLA D.180X77/12 50 HZ P.D.	FAN D.180X77/12 50 HZ P.D.	TURBINE D.180X77/12 50 HZ P.D.	LUEFTERRAD D.180X77/12 50 HZ P.D.	PALA VENTILADOR D.180X77/12 50 HZ P.D.
10	R75300160	1	GRIGLIA VENTILATORE D.180	FAN GUARD GRID D.180	GRILLE VENTILATEUR D.180	VENTILATORSCHUTZGITTER D.180	REJILLA VENTILADOR D.180
11	R58007250	1	CERNIERA SUPERIORE PIANA SERIE ICON 2015	UPPER DOOR HINGE ICON 2015	CHARNIERE SUPERIEURE PORTE ICON 2015	OBERES SCHARNIER ICON 2015	BISAGRA SUPERIOR ICON 2015
12	R58007260	1	CERNIERA INFERIORE PIANA SERIE ICON 2015	LOWER DOOR HINGE ICON 2015	CHARNIERE INFERIEURE PORTE ICON 2015	UNTERES SCHARNIER ICON 2015	BISAGRA INFERIOR ICON 2015
13	R58007280	1	PERNO CERNIERA PORTA DX SERIE ICON 2015	HINGE PIN ICON 2015 - RIGHT DOOR	CHEVILLE CHARNIERE ICON 2015 - PORTE DX	SCHARNIERSTIFT ICON 2015 - TUR DX	PERNO BISAGRA ICON 2015 - PUERTA DX
13	R58007290	1	PERNO CERNIERA PORTA SX SERIE ICON 2015 - PORTA CONTRARIA	HINGE PIN ICON 2015 - LEFT DOOR	CHEVILLE CHARNIERE ICON 2015 - PORTE SX	SCHARNIERSTIFT ICON 2015 - TUR SX	PERNO BISAGRA ICON 2015 - PUERTA SX
14	R69130570	2	TAPPO CHIUDIFORO D.8,5-14,5	COVER D.8,5-14,5	BOUCHON D.8,5-14,5	ABDECKUNG D.8,5-14,5	TAPON D.8,5-14,5
15	R58007270	1	TAMPONAM. CERNIERA INF.SERIE ICON 2015	CLOSING PLATE LOWER DOOR HINGE ICON 2015	TÔLE DE FERMETURE CHARNIERE INFERIEURE PORTE ICON 2015	VERSCHLUBLEISTE UNTERES SCHARNIER ICON 2015	PLACA DE CIERRE BISAGRA INFERIOR ICON 2015
16	R69180260	1	BACINELLA SCARICO FORNO ICON 2015	DRIP TRAY - ICON 2015	PLATEAU D'ÉGOUTTEMENT - ICON 2015	WASSERTROPFTASSE - ICON 2015	BANDEJA DEL GOTEO - ICON 2015
17	R69180310	3	TAPPO VITE BACINELLA SCARICO ICON 2015	COVER	BOUCHON	ABDECKUNG	TAPON
18	R69010260	1	NASELLO 1 STEP	DOOR LATCH 1 STEP	GACHE DE PORTE POUR OUVERTURE SIMPLE	SCHLIESSNASE 1 STUFE	NARIZ 1 CIERRE
19	R70044350	1	TELAIO GUARN. PORTA AP 05	FRONT GASKET	JOINT FACADE	DICHTUNG DER FRONTSEITE	JUNTA FRONTAL
20	R58007340	8	PERNO SUPP. PARATIE A FILO M5 ICON 2015	SIDE RUNNERS SUPPORT	SUPPORT GLISSIERES	BOLZEN AUFLAGESCHIENEN	PERNO PARATIA
21	R10201700	1	ASS. FILTRO DI SCARICO D.76/44.5 M/106-11	DRAIN FILTER	FILTRE ENCEINTE	ABFLUSSFILTER	FILTRO DESAGUE
22	R70010140	1	GUARNIZIONE SILICONE ROSSO 76x40,3x3	RED GASKET 76x40,3x3	ROUGE JOINT 76x40,3x3	ROTEN DICHTUNG 76x40,3x3	JUNTA ROJA 76x40,3x3
23	R65320220	2	SONDA "K" 6X80 1,5ML. TESTA RASTREM. 20mm	PROBE "K" 6X80 1,5ML.	SONDE "K" 6X80 1,5ML.	FUEHLER "K" 6X80 1,5ML.	SONDA "K" 6X80 1,5ML.
24	R62070023	2	BICONO PILOTA TUBO D.6	BICONE D.6	BICONE D. 6	KEGEL D.6	BICONO D.6
25	R62060223	2	DADO PILOTA TUBO D.6	NUT D.6	ECROU D. 6	MUTTER D.6	DADO D.6
26	R62280028	1	CURVA C/MORSET. HTS-HTSW X TUBO D.40 D.40X	CURVE WITH TERMINAL	COURBE AVEC BORNIER	KURVE MIT KLEMM	CURVA CON REGLETERA
27	R65110500	1	REGOL. PORTATA MARRONE 8Lt/h	8 LT/H WATER FLOW REDUCER	REGULATUER DE DEBIT 8 LT.	DURCHFLUSSMONDERER 8L/STD.	REGULADOR DE CAUDAL 8 LT.
28	R63070050	1	PRESSOSTATO 1/8" 0,5-0,35 BAR PH/91140	WATER SAFETY PRESSURE SWITCH	INT.A PRESSION SEC.-EAU	WASSER-DRUCKWACHTER	PRESOSTATO AQUA
29	R62030113	1	MANICOTTO RIDUZ. FF 1/8-1/4 OTTONE	REDUCTION COUPLING	MANCHON REDUCTION	REDUZIERMUFFE	MANGUITO REDUCCION
30	R62090508	1	RACC.TERMIN.DIR.FIL.CON.10X1/4	10X1/4 STRAIGHT THREADED TERMINAL PIPE FITTING	RACCORDEMENT	ENDVERBINDUNGSSTUCK 10 X 1/4" GESCHNITTEN	RACOR
31	R62090788	1	RIDUZIONE INTER.DRITTA ø10-ø6	REDUCTION PIPE FITTING	RACCORD DROIT REDUCTION	GERADE ANSCHLUSS-VERKLEINERUNG	RACOR DERECHO REDUCCION
32	R65110230	1	E.V. 2VIE 1P+1D 220V/50HZ CON ATTACC	SOLENOID VALVE 2 VIE 220V 50HZ	ELECTROVANNE 2 VIE 220V 50HZ	MAGNETVENTIL 2 VIE 220V 50HZ	ELECTROVALVULA 2 VIE 220V 50HZ
33	R65240200	1	PRESSACAVO V-TEC 21 NERO	FAIRLEAD	PRESSE CABLE	ZUGENTLASTUNG	PRENSACABLES
34	R65240210	1	CONTRODADO 116/21 N	LOCK NUT	CONTRE-ECROU	MUTTER	CONTRODADO
35	R69070170	4	PIEDE REG.1" 3/4 A304 C/VITE M10X25 PCN	FOOT WITH SCREW M10X25 PCN	PIED AVEC VIS M10X25 PCN	FUSS MIT SCHRAUBE M10X25 PCN	PATA CON TORNILLO M10X25 PCN

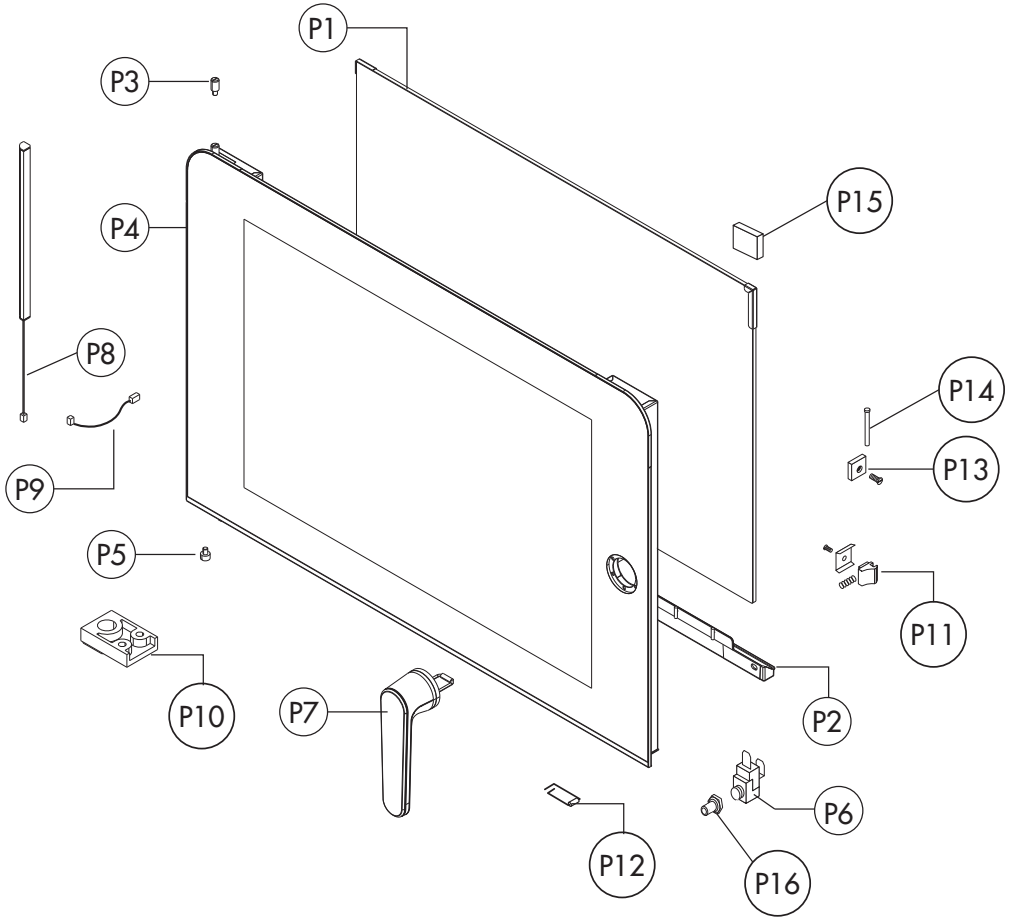

TAV. B

ICET051

POS.	COD.	Pz.	DESCRIZIONE	DESCRIPTION	DESCRIPTION	BESCHREIBUNG	DESCRIPCIÓN
PORTA / DOOR / PORTE / TÜR / PUERTA							
P1	R71201990	1	VETRO POST. PORTA REP 044 700x480x6	DOOR GLASS 700x480x6	VITRE PORTE 700x480x6	HARTGLASS 700x480x6	VIDRIO PUERTA 700x480x6
P2	R69180270	1	BACINELLA PORTA DX ICON 2015	DRIP TRAY DX ICON 2015 - RIGHT DOOR	PLATEAU D'ÉGOUTTEMENT DX ICON 2015	WASSERTROPFTASSE DX ICON 2015	BANDEJA DEL GOTEO DX ICON 2015
P2	R69180280	1	BACINELLA PORTA SX ICON 2015	DRIP TRAY SX ICON 2015 - LEFT DOOR	PLATEAU D'ÉGOUTTEMENT SX ICON 2015	WASSERTROPFTASSE SX ICON 2015	BANDEJA DEL GOTEO SX ICON 2015
P3	R58007310	1	FERMO SUPERIORE PORTA SERIE ICON 2015	UPPER DOOR CATCH KIT ICON 2015	ENSEMBLE ARRET PORTE ICON 2015	VERSCHLUSSATZ ICON 2015	KIT FIJACION SUPERIOR PARA PUERTA ICON 2015
P4	R17107690	1	PORTA COMPLETA LAINOX ICON 051	DOOR ASSEMBLY LAINOX ICON 051	PORTE COMPLETE LAINOX ICON 051	TUER KOMPLETT LAINOX ICON 051	PUERTA COMPLETA LAINOX ICON 051
P4	R17108310	1	PORTA COMPLETA ALPHATECH ICON 051	DOOR ASSEMBLY ALPHATECH ICON 051	PORTE COMPLETE ALPHATECH ICON 051	TUER KOMPLETT ALPHATECH ICON 051	PUERTA COMPLETA ALPHATECH ICON 051
P4	R17108320	1	PORTA COMPLETA NEUTRA ICON 051	DOOR ASSEMBLY NEUTRA ICON 051	PORTE COMPLETE NEUTRA ICON 051	TUER KOMPLETT NEUTRA ICON 051	PUERTA COMPLETA NEUTRA ICON 051
P4	R17108680	1	PORTA COMPLETA ALPHATECH NEUTRA ICON 051	DOOR ASSEMBLY ALPHATECH NEUTRA ICON 051	PORTE COMPLETE ALPHATECH NEUTRA ICON 051	TUER KOMPLETT ALPHATECH NEUTRA ICON 051	PUERTA COMPLETA ALPHATECH NEUTRA ICON 051
P4	R17108470	1	PORTA CONTRARIA COMPLETA LAINOX ICON 051	DOOR ASSEMBLY LAINOX ICON 051- LEFT DOOR	PORTE COMPLETE LAINOX ICON 051	TUER KOMPLETT LAINOX ICON 051	PUERTA COMPLETA LAINOX ICON 051
P4	R17108500	1	PORTA CONTRARIA COMPLETA ALPHATEC ICON 051	DOOR ASSEMBLY ALPHATECH ICON 051- LEFT DOOR	PORTE COMPLETE ALPHATECH ICON 051	TUER KOMPLETT ALPHATECH ICON 051	PUERTA COMPLETA ALPHATECH ICON 051
P4	R17108530	1	PORTA CONTRARIA COMPLETA NEUTRA ICON 051	DOOR ASSEMBLY NEUTRA ICON 051 - LEFT DOOR	PORTE COMPLETE NEUTRA ICON 051	TUER KOMPLETT NEUTRA ICON 051	PUERTA COMPLETA NEUTRA ICON 051
P4	R17108710	1	PORTA CONTRARIA COMPLETA ALPHATECH NEUTRA ICON 051	DOOR ASSEMBLY ALPHATECH NEUTRA ICON 051- LEFT DOOR	PORTE COMPLETE ALPHATECH NEUTRA ICON 051	TUER KOMPLETT ALPHATECH NEUTRA ICON 051	PUERTA COMPLETA ALPHATECH NEUTRA ICON 051
P5	R58007320	1	FERMO INFERIORE PORTA SERIE ICON 2015	LOWER DOOR CATCH KIT ICON 2015	ENSEMBLE ARRET PORTE ICON 2015	VERSCHLUSSATZ ICON 2015	KIT FIJACION INFERIOR PARA PUERTA ICON 2015
P6	R65260540	1	MICRO PORTA	DOOR SWITCH	MICRO PORTE	TUERSCHALTER	MICRO PUERTA
P7	R69010900	1	GRUPPO CHIUSURA COLORE NERO ICON 2015 - PORTA LAINOX E NEUTRA	DOOR CATCH KIT ICON 2015 - DOOR LAINOX - NEUTRA	ENSAMBLE FERMETURE PORTE ICON 2015 - PORTE LAINOX - NEUTRA	VERSCHLUSSATZ ICON 2015 - TUER LAINOX - NEUTRA	MANIJA DE LA PUERTA ICON 2015 - PUERTA LAINOX - NEUTRA
P7	R69010930	1	GRUPPO CHIUSURA BIANCO OPACO ICON 2015 - PORTA ALPHATECH	DOOR CATCH KIT ICON 2015 - DOOR ALPHATECH	ENSAMBLE FERMETURE PORTE ICON 2015 - PORTE ALPHATECH	VERSCHLUSSATZ ICON 2015 - TUER ALPHATECH	MANIJA DE LA PUERTA ICON 2015 - PUERTA ALPHATECH
P8	R65270560	1	LAMPADA LED PROFILO 45° L = 360 mm	LED LIGHT	LAMPE	LAMPE	LAMPARA
P9	R66605970	1	CAVO PROLUNGA X LED L=100MM	CABLE	CABLE	KABEL	CABLE
P10	R58007300	1	BLOCCHETTO INF. PORTA SERIE ICON 2015	LOWER DOOR ASSEMBLY	ENSEMBLE PORTE INFERIEURE	UNTERES TURBEFSTIGUNG	BLOQUE PUERTA INFERIOR ICON 2015
P11	R58001780	1	FERMO VETRO PORTA P2000	INNER GLASS CATCH KIT	ENSEMBLE ARRET VERRE INTERIEUR	VERSCHLUSSATZ F. INNENSCHEIBE	KIT FIJACION VIDRIO INTERNO
P12	R61620132	1	MOLLA AGGANCIO NASELLO	DOOR LOCK SPRING	RESSORT DE FERMETURE PORTE	TÜR SCHLUSSFEDER	MUELLE DE ENGANCHE A TRINQUET
P13	R58001760	2	CERNIERA FISSA VETRO SR2000	INNER GLASS SOLID HINGE	CHARNIERE VERRE INTERIEUR	SCHARNIER F. INNENSCHEIBE	BISAGRA FIJA VIDRIO INTERNO
P14	R58001770	2	PERNO CERNIERA VETRO SR2000	INNER GLASS HINGE PIN	PIVOT CHARNIERE VERRE INTERIEUR	SCHARNIERBOLZEN F. INNENSCHEIBE	PERNO BISAGRA VIDRIO INTERNO
P15	R70050180	6	DISTANZIALE VETRO 15x8 SIL.55SH M4x12 A2	THICKNESS	EPAISSEUR	DICKE	ESPESOR
P16	R58001860	1	PERNO SUPP. PARATIE ALPHATECH	SIDE RUNNERS SUPPORT	SUPPORT GLISSIERES	BOLZEN AUFLAGESCHIENEN	PERNO PARATIA

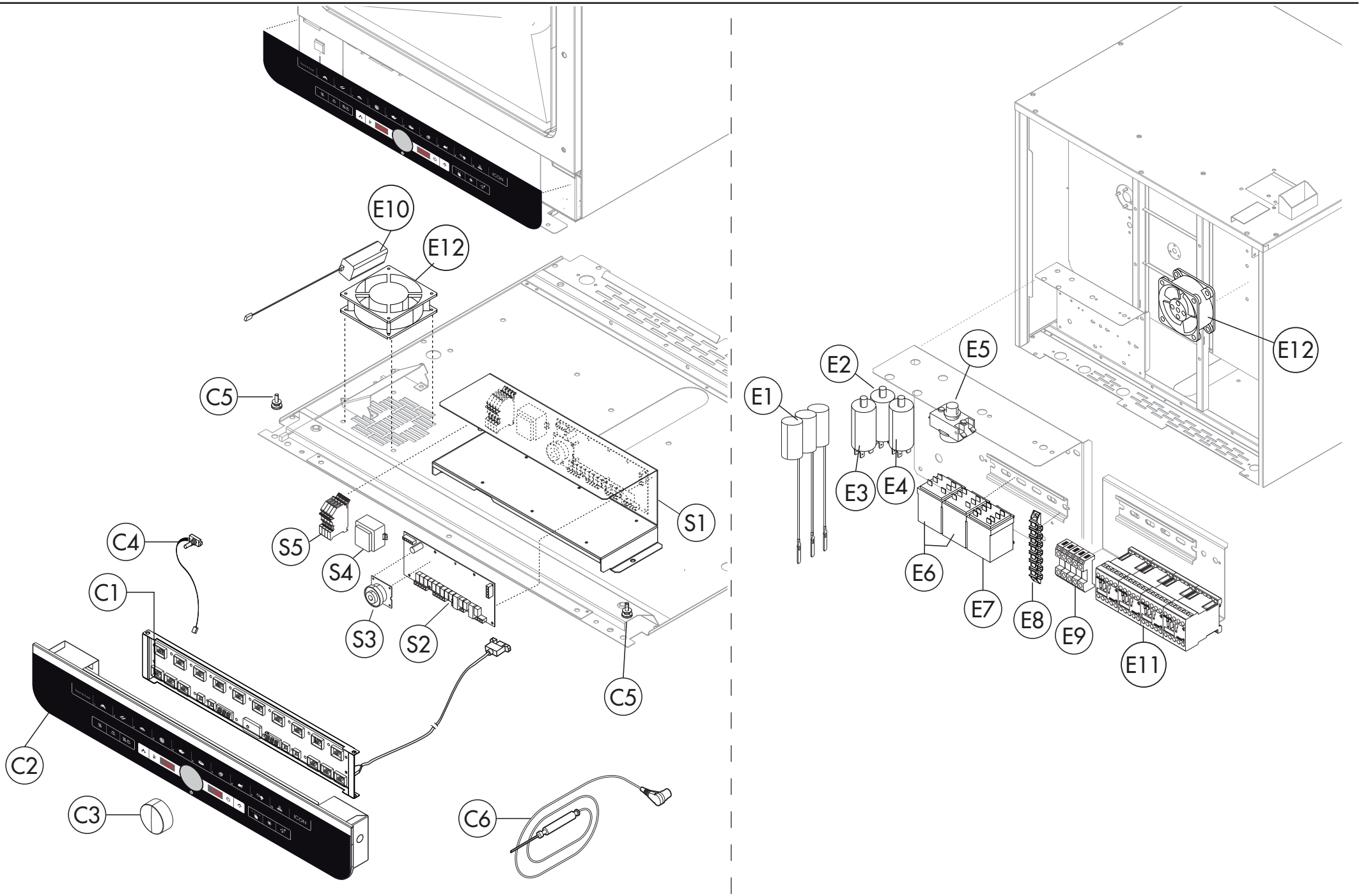

TAV. C

ICET051

POS.	COD.	Pz.	DESCRIZIONE	DESCRIPTION	DESCRIPTION	BESCHREIBUNG	DESCRIPCIÓN
CRUSCOTTO ELETTRICO / ELECTRONIC CONTROL PANEL / CONTRÔLE ÉLECTRONIQUE / ELEKTRONISCHE STEUEREINHEIT / PANEL DE CONTROL							
C1	R65302660	1	SCHEDA TASTIERA TOUCH ICON 2015 + CAVO	REALY PC BOARD ICON 2015 + CABLE	FICHE PANNEAU COMMANDES ICON 2015	TASTAURPLATINE ICON 2015	PLACA PULSADORES ICON 2015
C2	R17410690T1	1	CRUSCOTTO + VETRO IC_T051 - 71 - 101 LAINOX	DISPLAY + GLASS IC_T051-71-101 LAINOX	DISPLAY + VITRE IC_T051-71-101 LAINOX	DISPLAY + GLASS IC_T051-71-101 LAINOX	DISPLAY + VIDRIO IC_T051-71-101 LAINOX
C2	R17410690T1A	1	CRUSCOTTO + VETRO IC_T051 - 71 - 101 ALPH-NEUTRO	DISPLAY + GLASS IC_T051-71-101 ALPH-NEUTRO	DISPLAY + VITRE IC_T051-71-101 ALPH-NEUTRO	DISPLAY + GLASS IC_T051-71-101 ALPH-NEUTRO	DISPLAY + VIDRIO IC_T051-71-101 ALPH-NEUTRO
C3	R69030340	1	MANOPOLA ICON 2015	KNOB KIT ICON 2015	POIGNEE COMMANDE ICON 2015	DREHKNOPF ICON 2015	PULSADOR MANETA ICON 2015
C4	R65302720	1	ENCODER + CAVO ICON	ENCODER + CABLE	ENCODER + CABLE	ENCODER + KABEL	ENCODER + CABLE
C5	R69010990	2	MANOPOLA M4 FISSAGGIO CRUSCOTTI ICON	DISPLAY SCREW	VIS DE BLOCAGE DISPLAY	SCHRAUBE FÜR DISPLAY	TORNILLO FIJACION DISPLAY
C6	R65321430	1	SONDA AL CUORE K4P ISC04 (6 PIN,PC PLAS.)	CORE TEMPERATURE PROBE	SONDE A COEUR	KERNTEMPERATURFUEHLER	SONDA AL CORAZON
SCHEDA BASE / MAIN PC BOARD / FICHE PANNEAU PRINCIPAL / HAUPTPLATINE / PLACA BASE							
S1	R17108090	1	SCHEDA BASE COMPLETA ICON TOUCH	MAIN PC BOARD ICON 2015	FICHE PANNEAU PRINCIPAL ICON 2015	HAUPTPLATINE ICON 2015	PLACA BASE ICON 2015
S2	R65302670	1	SCHEDA BASE TOUCH ICON 2015	MAIN PC BOARD ICON 2015	FICHE PANNEAU PRINCIPAL ICON 2015	HAUPTPLATINE ICON 2015	PLACA BASE ICON 2015
S3	R65302680	1	SCHEDA BUZZER ICON 2015	PC BOARD BUZZER ICON 2015	SONNERIE PLATINE ICON 2015	PLATINENSUMMER ICON 2015	ZUMBADOR PLACA ELECTRONICA ICON 2015
S4	R65180420	1	TRASF.RE 20VA 0-220-240/12V	TRANSFORMER 20VA 0-220-240/12V	TRANSFORMATEUR 20VA 0-220-240/12V	TRANSFORMATOR 20VA 0-220-240/12V	TRANSFORMADOR 20VA 0-220-240/12V
S5	R65210020	4	PORTAFUSIBILE BARRA DIN 5x20	FUSE CARRIER	PORTE-FUSIBLE	SICHERUNGSHALTER	PORTAFUSIBLE
COMPONENTI ELETTRICI / ELECTRONIC COMPONENTS / COMPOSANTS ÉLETRIQUES / ELEKTRISCHE BAUTEILE / COMPONENTES ELÉTRICOS							
E1	R65280200	3	FILTRO Cx=0,47æ F Cy=2X10nf	INTERFERENCE SUPPRESSOR	FILTRE ANTIPARASITES	STOERSCHUTZFILTER	FILTRO
E2	R65190080	1	CONDENS. 5µF V425-B C/CAP.C/COD.	CAPACITOR 5µF	CONDENSATEUR 5µF	KONDENSATOR 5µF	CONDENSADOR 5µF
E3*	R65190240	1	CONDENSATORE 10µF C/USCITA 4 FASTON 6,35	CAPACITOR 10µF	CONDENSATEUR 10µF	KONDENSATOR 10µF	CONDENSADOR 10µF
E4	R65190220	1	CONDENSATORE 0,47µF 275V	CAPACITOR 0,47µF 275V	CONDENSATEUR 0,47µF 275V	KONDENSATOR 0,47µF 275V	CONDENSADOR 0,47µF 275V
E5	R65070450	1	TERMOST. SICUR. BIP. 335 ø C NEGAT.	THERMOSTAT	THERMOSTAT	THERMOSTAT	TERMOSTATO
E6	R65170100	2	RELÈ FINDER	RELAY	RELAIS	RELAIS	RELE
E7*	R65170170	1	RELE' FINDER CONT.SCAMB.	RELAY	RELAIS	RELAIS	RELE
E8	R65220360	1	MORSETTIERA A VITE 7 POLI	TERMINAL	BORNE	KLEMME	REGLETA
E9	R65220091	1	MORSETTIERA LX2E (TIPO 2) NEW	TERMINAL BOARD	BORNIER	KLEMMLEISTE	REGLETERA
E10	R65187220	1	ALIMENTATORE APV-12-24	POWER SUPPLY	BLOC D'ALIMENTATION	NETZTEIL	ADAPTADOR DE CORRIENTE ALTERNA
E11	R65140700	4	TELERUTTORE DIL M9-01 4 KW-20 A	CONTACTOR	CONTACTEUR	SCHUETZ	CONTACTOR
E12	R65060050	2	VENTILATORE COMPATTO D.120	COMPONENTS VENTILATION MOTOR D.120	MOTEUR DE REFROIDISSMENT D.120	ABKULUNGS MOTOR D.120	MOTOR DE ENFRIAMIENTO D.120

* PER GLI ICET051 230/1/50 2 VEL - FOR ICET051 230/1/50 2 VEL - POUR ICET051 230/1/50 2 VEL - FÜR ICET051 230/1/50 2 VEL - POR ICET051 230/1/50 2 VEL

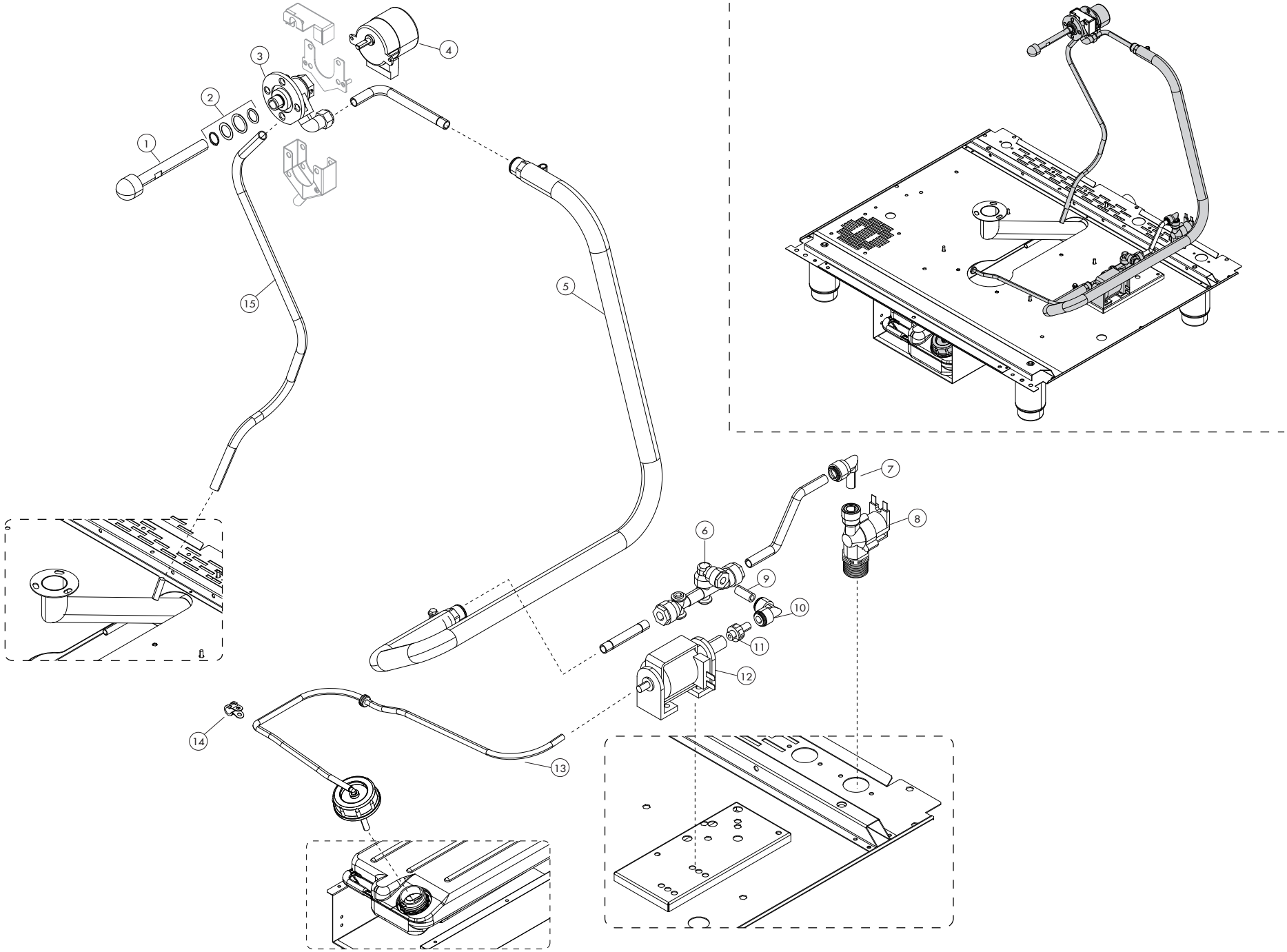

TAV. D

ICET051

POS.	COD.	Pz.	DESCRIZIONE	DESCRIPTION	DESCRIPTION	BESCHREIBUNG	DESCRIPCIÓN
1	R58007050	1	ALBERO L=110 LAVAGGIO MOB (M_051)	WASHING SYSTEM INNER ASSEMBLY	ENSEMBLE INTERIEUR DU LAVAGE	INNEN WASCHARMBEFSTIGUNG	KIT INTERNO LAVADO
2	R70045120	1	KIT GUARNIZIONI PER LAVAGGIO MOB	GASKETS KIT	ENSEMBLE JOINTS	DICHTUNGSSATZ	KIT JUNTAS
3	R99000160	1	KIT FLANGIA LAVAGGIO MOB	WASHING SYSTEM FLANGE KIT	ENSAMBLE BRIDE BRAS DE LAVAGE	FLANSCH WASCHARMBEFESTINGUNG	KIT PLATINA LAVADO
4	R65090260	1	MOTORID. LAV.	WASHING GEARED MOTORS	MOTO-REDUCTEURS DE LAVAGE	GETRIEBEMOTOREN	MOTORREDUCTORES LAVADO
5	R14171760	1	PREM. TUBO LAV. DETER. ICON 2015	DETERGENT PIPE ICON 2015	TUBE DETERGEANT ICON 2015	REININGER LEITUNG ICON 2015	TUBO DETERGENTE ICON 2015
6	R62090888	1	COLLET. RES. ACET. 3 VIE-2 D.10 + 1D.8 + 2 ANTIRIT	MANIFOLD	COLLECTEUR	KRÜMMER	COLECTOR
7	R62090528	1	RACC.A GOMITO C/CODOLO 10X10	ELBOW PIPE FITTING (WITH TANG) 10 X 10	COURBE AVEC QUEUE 10x10	WINKELVERBINDUNGSSTUCK 10x10 MIT SCHAFT	RACOR DE GOMA CON CODO 10x10
8	R65110320	1	E.V. 1 VIA 230V 50/60 HZ OUT D10	SOLENOID VALVE 1 VIE 230V 50/60 HZ	ELECTROVANNE 1 VIE 230V 50/60 HZ	MAGNETVENTIL 1 VIE 230V 50/60 HZ	ELECTROVALVULA 1 VIE 230V 50/60 HZ
9	R80150020	0,04	TUBO PU 8mm x6 TRASPARENTE	PE D.8mm x6 DETERGENT FLEXIBLE PIPE	TUBE DETERGEANT D. 8x6	ROHRLEITUNG F. REININGER PE D.8mm x6	TUBO DETERGENTE PE D.8mm x6
10	R62090498	1	RACC. INTERMEDIO A GOMITO D.8	ELBOW PIPE FITTING F	COURBE AVEC QUEUE	WINKELVERBINDUNGSSTUCK	RACOR DE GOMA
11	R62090608	1	TERMINALE C/CODOLO 8x1/8"	8X1/8 END SIDE PIPE FITTING (WITH TANG)	RACCORD AVEC QUEUE 8x1/8"	ENDVERBINDUNGSSTUCK 8 X 1/8" MIT SCHAFT	RACOR TERMINAL CON CODO 8x1/8"
12	R65110600	1	POMPA ELETTROM. A PIS. OSC.	POMPE DETERGENT	DETERGEANT PUMP	REINIGERPUMPE	BOMBA DETERGENTE
13	R14171790	1	PREM. TUBO DETERGENTE TANICA N/S101 + ICON	DETERGENT PIPE	TUBE DETERGEANT	ROHRLEITUNG F. REININGER	TUBO DETERGENTE
14	R61630131	1	FASC. STRINGITUBO ZINC. + GOMMA SERIE PK D.80	METAL CLAMPS D.80	COLLIER DE SERRAGE D.80	VERZINKTE SCHELLEN D.80	ABRAZADERA D.80
15	R80120060	1m	TUBO SILIC. TRASP. SR60/TR 7/12	PIPE	TUBE	LEITUNG	TUBO