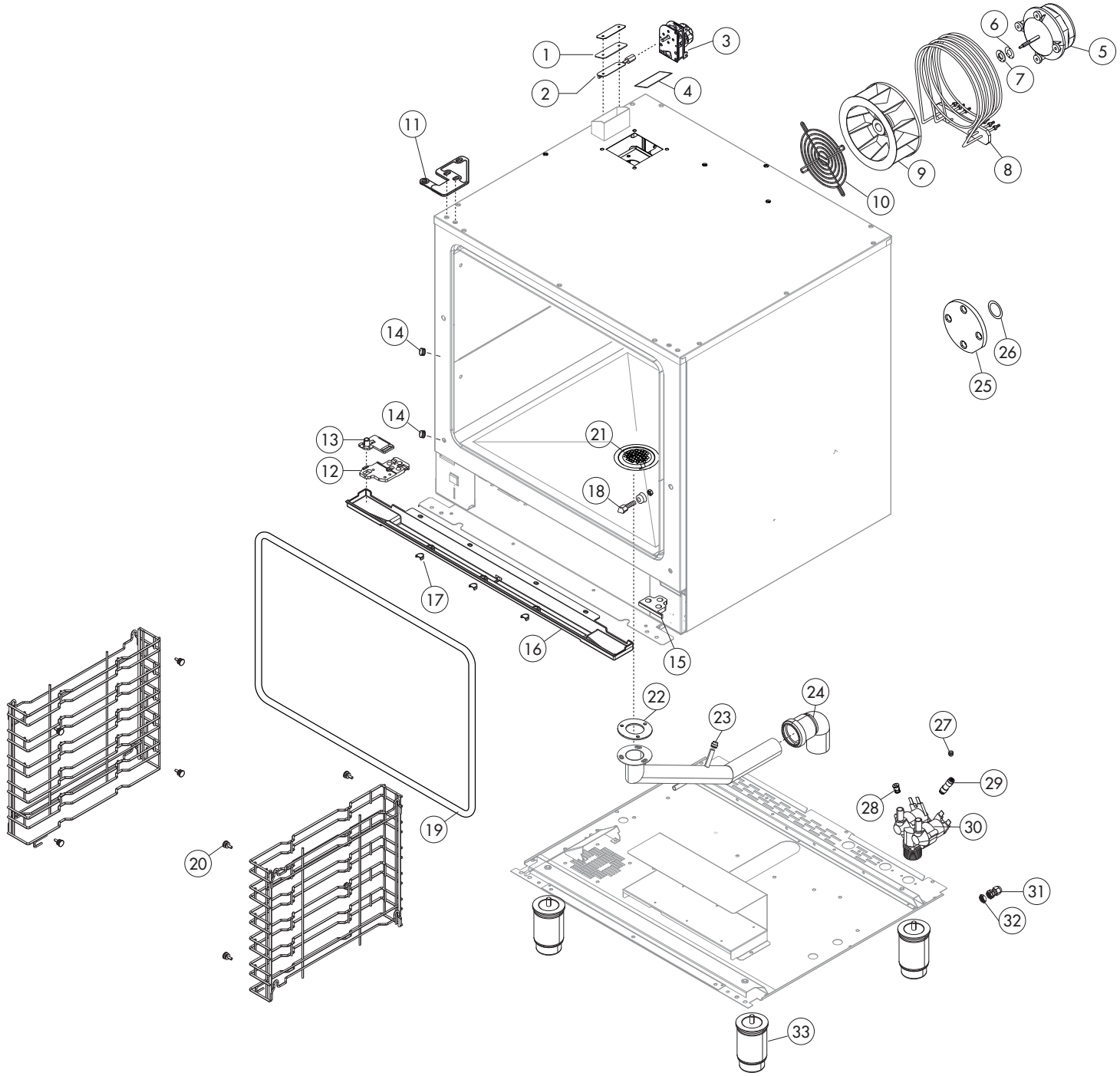

TAV. A

ICEM101

POS.	COD.	Pz.	DESCRIZIONE	DESCRIPTION	DESCRIPTION	BESCHREIBUNG	DESCRIPCIÓN
1	R70050170	1	GUARNIZIONE TUBO SFIATO 80x40	GASKET 80x40	JOINT 80x40	DICHTUNG 80X40	JUNTA 80X40
2	R58007330	1	ASTA FARFALLA SFIATO SERIE ICON 2015	CHAMBER VENT PLATE	ENTFEUCHTUNGSSCHIEBER	DISQUE EVENT	DISCO RESPIRADERO
3	R65090270	1	PROGRAMMATORE V230/50-60Hz	DAMPER SYSTEM	SORTIE EVAPORATION MOUFLE	DAMPFABLASS-STELLMOTOR	MOTOR RESPIRADERO COMPLETO
4	R70050200	1	GUARNIZIONE ESTERNA TUBO SFIATO 80X40	EXTERNAL GASKET 80x40	JOINT 80x40	RINGDICHTUNG 80X40	JUNTA 80X40
5	R65041040	2	MOTORE 1F.125Win-75Wout 2VEL C/COND. FIR	MOTOR 1F.125Win-75Wout	MOTEUR 1F.125Win-75Wout	MOTOR 1F.125Win-75Wout	MOTOR 1F.125Win-75Wout
6	R58005500	2	SEDE PER "TENUTA D.8/22X7" A 04-05	MOTOR GASKET BRASS FLANGE	BRIDE JOINT MOTEUR	FLANSCH F. MOTORDICHTUNG	BRIDA JUNTA MOTOR
7	R70020020	2	GUARNIZIONE DI TENUTA A 04 BAD40 8X22	OR GASKETS	JOINT	RINGDICHTUNG	JUNTA
8	R65011790	2	RESISTENZA 7000W 230V C/FASTON CAM. ICON 2015	HEATING ELEMENT 7000W 230V	RESISTANCE 7000W 230V	HEIZKOERPER 7000W 230V	RESISTENCIA 7000W 230V
9	R75400410	2	VENTOLA D.180X77/12 50 HZ P.D.	FAN D.180X77/12 50 HZ P.D.	TURBINE D.180X77/12 50 HZ P.D.	LUEFTERRAD D.180X77/12 50 HZ P.D.	PALA VENTILADOR D.180X77/12 50 HZ P.D.
10	R75300160	2	GRIGLIA VENTILATORE D.180	FAN GUARD GRID D.180	GRILLE VENTILATEUR D.180	VENTILATORSCHUTZGITTER D.180	REJILLA VENTILADOR D.180
11	R58007250	1	CERNIERA SUPERIORE PIANA SERIE ICON 2015	UPPER DOOR HINGE ICON 2015	CHARNIERE SUPERIEURE PORTE ICON 2015	OBERES SCHARNIER ICON 2015	BISAGRA SUPERIOR ICON 2015
12	R58007260	1	CERNIERA INFERIORE PIANA SERIE ICON 2015	LOWER DOOR HINGE ICON 2015	CHARNIERE INFERIEURE PORTE ICON 2015	UNTERES SCHARNIER ICON 2015	BISAGRA INFERIOR ICON 2015
13	R58007280	1	PERNO CERNIERA PORTA DX SERIE ICON 2015	HINGE PIN ICON 2015 - RIGHT DOOR	CHEVILLE CHARNIERE ICON 2015 - PORTE DX	SCHARNIERSTIFT ICON 2015 - TUR DX	PERNO BISAGRA ICON 2015 - PUERTA DX
13	R58007290	1	PERNO CERNIERA PORTA SX SERIE ICON 2015 - PORTA CONTRARIA	HINGE PIN ICON 2015 - LEFT DOOR	CHEVILLE CHARNIERE ICON 2015 - PORTE SX	SCHARNIERSTIFT ICON 2015 - TUR SX	PERNO BISAGRA ICON 2015 - PUERTA SX
14	R69130570	2	TAPPO CHIUDIFORO D.8,5-14,5	COVER D.8,5-14,5	BOUCHON D.8,5-14,5	ABDECKUNG D.8,5-14,5	TAPON D.8,5-14,5
15	R58007270	1	TAMPONAM. CERNIERA INF.SERIE ICON 2015	CLOSING PLATE LOWER DOOR HINGE ICON 2015	TÔLE DE FERMETURE CHARNIERE INFERIEURE PORTE ICON 2015	VERSCHLUBLEISTE UNTERES SCHARNIER ICON 2015	PLACA DE CIERRE BISAGRA INFERIOR ICON 2015
16	R69180260	1	BACINELLA SCARICO FORNO ICON 2015	DRIP TRAY - ICON 2015	PLATEAU D'ÉGOUTTEMENT - ICON 2015	WASSERTROPFTASSE - ICON 2015	BANDEJA DEL GOTEO - ICON 2015
17	R69180310	3	TAPPO VITE BACINELLA SCARICO ICON 2015	COVER	BOUCHON	ABDECKUNG	TAPON
18	R69010260	1	NASELLO 1 STEP	DOOR LATCH 1 STEP	GACHE DE PORTE POUR OUVERTURE SIMPLE	SCHLIESSNASE 1 STUFE	NARIZ 1 CIERRE
19	R70044440	1	TELAIO GUARN. PORTA REP 084/104	FRONT GASKET	JOINT FACADE	DICHTUNG DER FRONTSEITE	JUNTA FRONTAL
20	R58007340	8	PERNO SUPP. PARATIE A FILO M5 ICON 2015	SIDE RUNNERS SUPPORT	SUPPORT GLISSIERES	BOLZEN AUFLAGESCHIENEN	PERNO PARATIA
21	R10201700	1	ASS. FILTRO DI SCARICO D.76/44.5 M/106-11	DRAIN FILTER	FILTRE ENCEINTE	ABFLUSSFILTER	FILTRO DESAGUE
22	R70010140	1	GUARNIZIONE SILICONE ROSSO 76x40,3x3	RED GASKET 76x40,3x3	ROUGE JOINT 76x40,3x3	ROTEN DICHTUNG 76x40,3x3	JUNTA ROJA 76x40,3x3
23	R62090868	1	TERMINALE CIECO D.10	D.10 END SIDE PIPE FITTING	RACCORD	ENDVERBINDUNGSSTUCK	RACOR TERMINAL
24	R62280028	1	CURVA C/MORSET. HTS-HTSW X TUBO D.40 D.40X	CURVE WITH TERMINAL	COURBE AVEC BORNIER	KURVE MIT KLEMM	CURVA CON REGLETERA
25	R58007400	1	FLANGIA TAPPO LAVAGGIO MOB	WASHING SYSTEM COVER FLANGE	BRIDE BOUCHON	ABDECKUNG FLANSCH	PLATINA TAPON LAVADO
26	R70010060	1	GUARNIZIONE OR 24.2x3 Viton FPM-80	GASKET OR 24.2x3	OR JOINT 24.2x3	RINGDICHTUNG 24.2x3	JUNTA OR 24.2x3
27	R65110500	2	REGOL. PORTATA MARRONE 8Lt/h	8 LT/H WATER FLOW REDUCER	REGULATUER DE DEBIT 8 LT.	DURCHFLUSSMONDERER 8L/STD.	REGULADOR DE CAUDAL 8 LT.
28	R62090508	2	RACC.TERMIN.DIR.FIL.CON.10X1/4	10X1/4 STRAIGHT THREADED TERMINAL PIPE FITTING	RACCORDEMENT	ENDVERBINDUNGSSTUCK 10 X 1/4" GESCHNITTEN	RACOR
29	R62090788	2	RIDUZIONE INTER.DRITTA ø10-ø6	REDUCTION PIPE FITTING	RACCORD DROIT REDUCTION	GERADE ANSCHLUSS-VERKLEINERUNG	RACOR DERECHO REDUCCION
30	R65110210	1	E.V. 2 VIE 220V/50HZ CON ATTACC	SOLENOID VALVE 2VIE 220V/50HZ	ELECTROVANNE 2VIE 220V/50HZ	MAGNETVENTIL 2VIE 220V/50HZ	ELECTROVALVULA 2VIE 220V/50HZ
31	R65240200	1	PRESSACAVO V-TEC 21 NERO	FAIRLEAD	PRESSE CABLE	ZUGENTLASTUNG	PRENSACABLES
32	R65240210	1	CONTRODADO 116/21 N	LOCK NUT	CONTRE-ECROU	MUTTER	CONTRODADO
33	R69070170	4	PIEDE REG.1" 3/4 A304 C/VITE M10X25 PCN	FOOT WITH SCREW M10X25 PCN	PIED AVEC VIS M10X25 PCN	FUSS MIT SCHRAUBE M10X25 PCN	PATA CON TORNILLO M10X25 PCN

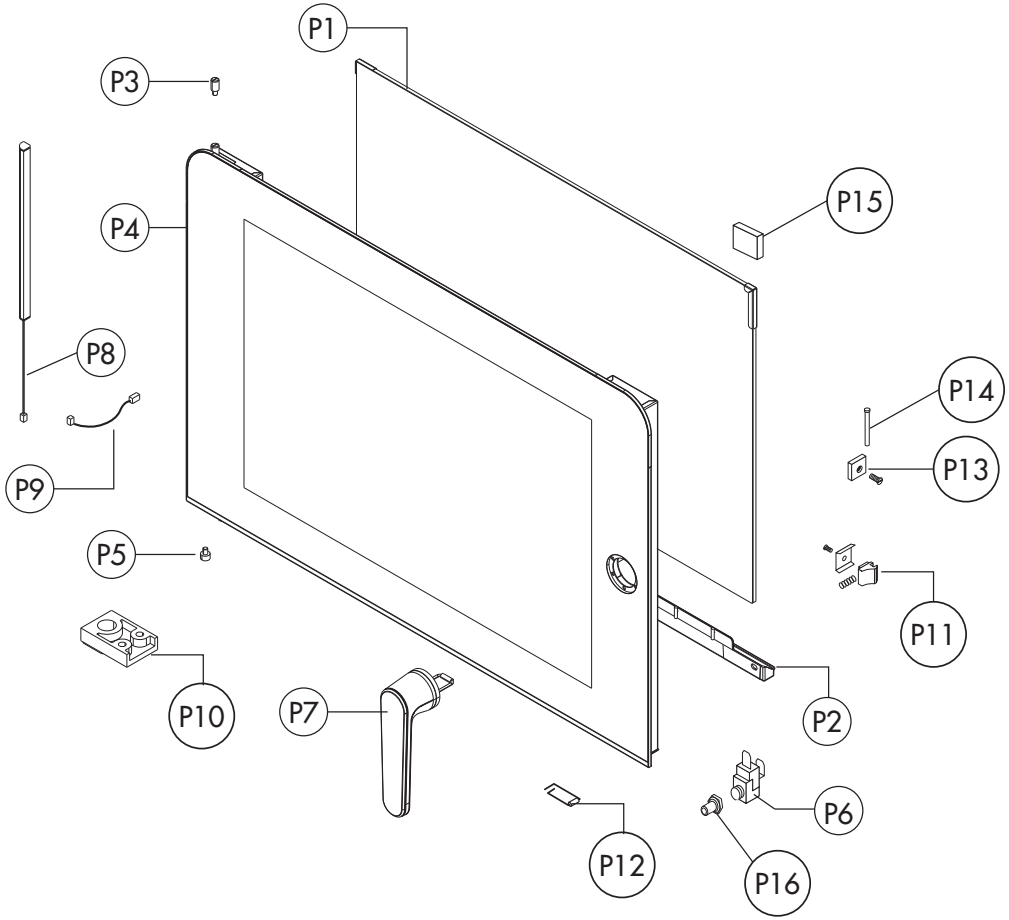

TAV. B

ICEM101

POS.	COD.	Pz.	DESCRIZIONE	DESCRIPTION	DESCRIPTION	BESCHREIBUNG	DESCRIPCIÓN
PORTA / DOOR / PORTE / TÜR / PUERTA							
P1	R71201950	1	VETRO POST. PORTA REP 084 700x855x6	DOOR GLASS 700x855x6	VITRE PORTE 700x855x6	HARTGLASS 700x855x6	VIDRIO PUERTA 700x855x6
P2	R69180270	1	BACINELLA PORTA DX ICON 2015	DRIP TRAY DX ICON 2015 - RIGHT DOOR	PLATEAU D'ÉGOUTTEMENT DX ICON 2015	WASSERTROPFTASSE DX ICON 2015	BANDEJA DEL GOTEO DX ICON 2015
P2	R69180280	1	BACINELLA PORTA SX ICON 2015	DRIP TRAY SX ICON 2015 - LEFT DOOR	PLATEAU D'ÉGOUTTEMENT SX ICON 2015	WASSERTROPFTASSE SX ICON 2015	BANDEJA DEL GOTEO SX ICON 2015
P3	R58007310	1	FERMO SUPERIORE PORTA SERIE ICON 2015	UPPER DOOR CATCH KIT ICON 2015	ENSEMBLE ARRET PORTE ICON 2015	VERSCHLUSSATZ ICON 2015	KIT FIJACION SUPERIOR PARA PUERTA ICON 2015
P4	R17107770	1	PORTA COMPLETA LAINOX ICON 101	DOOR ASSEMBLY LAINOX ICON 101	PORTE COMPLETE LAINOX ICON 101	TUER KOMPLETT LAINOX ICON 101	PUERTA COMPLETA LAINOX ICON 101
P4	R17108350	1	PORTA COMPLETA ALPHATECH ICON 101	DOOR ASSEMBLY ALPHATECH ICON 101	PORTE COMPLETE ALPHATECH ICON 101	TUER KOMPLETT ALPHATECH ICON 101	PUERTA COMPLETA ALPHATECH ICON 101
P4	R17108360	1	PORTA COMPLETA NEUTRA ICON 101	DOOR ASSEMBLY NEUTRA ICON 101	PORTE COMPLETE NEUTRA ICON 101	TUER KOMPLETT NEUTRA ICON 101	PUERTA COMPLETA NEUTRA ICON 101
P4	R17108700	1	PORTA COMPLETA ALPHATECH NEUTRA ICON 101	DOOR ASSEMBLY ALPHATECH NEUTRA ICON 101	PORTE COMPLETE ALPHATECH ICON 101	TUER KOMPLETT ALPHATECH NEUTRA ICON 101	PUERTA COMPLETA ALPHATECH NEUTRA ICON 101
P4	R17108490	1	PORTA CONTRARIA COMPLETA LAINOX ICON 101	DOOR ASSEMBLY LAINOX ICON 101- LEFT DOOR	PORTE COMPLETE LAINOX ICON 101	TUER KOMPLETT LAINOX ICON 101	PUERTA COMPLETA LAINOX ICON 101
P4	R17108520	1	PORTA CONTRARIA COMPLETA ALPHATEC ICON 101	DOOR ASSEMBLY ALPHATECH ICON 101- LEFT DOOR	PORTE COMPLETE ALPHATECH ICON 101	TUER KOMPLETT ALPHATECH ICON 101	PUERTA COMPLETA ALPHATECH ICON 101
P4	R17108550	1	PORTA CONTRARIA COMPLETA NEUTRA ICON 101	DOOR ASSEMBLY NEUTRA ICON 101 - LEFT DOOR	PORTE COMPLETE NEUTRA ICON 101	TUER KOMPLETT NEUTRA ICON 101	PUERTA COMPLETA NEUTRA ICON 101
P4	R17108730	1	PORTA CONTRARIA COMPLETA ALPHATECH NEUTRA ICON 101	DOOR ASSEMBLY ALPHATECH NEUTRA ICON 101 - LEFT DOOR	PORTE COMPLETE ALPHATECH ICON 101	TUER KOMPLETT ALPHATECH NEUTRA ICON 101	PUERTA COMPLETA ALPHATECH NEUTRA ICON 101
P5	R58007320	1	FERMO INFERIORE PORTA SERIE ICON 2015	LOWER DOOR CATCH KIT ICON 2015	ENSEMBLE ARRET PORTE ICON 2015	VERSCHLUSSATZ ICON 2015	KIT FIJACION INFERIOR PARA PUERTA ICON 2015
P6	R65260540	1	MICRO PORTA	DOOR SWITCH	MICRO PORTE	TUERSCHALTER	MICRO PUERTA
P7	R69010900	1	GRUPPO CHIUSURA COLORE NERO ICON 2015 - PORTA LAINOX E NEUTRA	DOOR CATCH KIT ICON 2015 - DOOR LAINOX - NEUTRA	ENSAMBLE FERMETURE PORTE ICON 2015 - PORTE LAINOX - NEUTRA	VERSCHLUSSATZ ICON 2015 - TUER LAINOX - NEUTRA	MANIJA DE LA PUERTA ICON 2015 - PUERTA LAINOX - NEUTRA
P7	R69010930	1	GRUPPO CHIUSURA BIANCO OPACO ICON 2015 - PORTA ALPHATECH	DOOR CATCH KIT ICON 2015 - DOOR ALPHATECH	ENSAMBLE FERMETURE PORTE ICON 2015 - PORTE ALPHATECH	VERSCHLUSSATZ ICON 2015 - TUER ALPHATECH	MANIJA DE LA PUERTA ICON 2015 - PUERTA ALPHATECH
P8	R65270580	1	LAMPADA LED PROFILO 45° L = 710 mm	LED LIGHT	LAMPE	LAMPE	LAMPARA
P9	R66605970	1	CAVO PROLUNGA X LED L=100MM	CABLE	CABLE	KABEL	CABLE
P10	R58007300	1	BLOCCHETTO INF. PORTA SERIE ICON 2015	LOWER DOOR ASSEMBLY	ENSEMBLE PORTE INFERIEURE	UNTERES TURBEFSTIGUNG	BLOQUE PUERTA INFERIOR ICON 2015
P11	R58001780	1	FERMO VETRO PORTA P2000	INNER GLASS CATCH KIT	ENSEMBLE ARRET VERRE INTERIEUR	VERSCHLUSSATZ F. INNENSCHEIBE	KIT FIJACION VIDRIO INTERNO
P12	R61620132	1	MOLLA AGGANCIO NASELLO	DOOR LOCK SPRING	RESSORT DE FERMETURE PORTE	TÜR SCHLUSSFEDER	MUELLE DE ENGANCHE A TRINQUET
P13	R58001760	2	CERNIERA FISSA VETRO SR2000	INNER GLASS SOLID HINGE	CHARNIERE VERRE INTERIEUR	SCHARNIER F. INNENSCHEIBE	BISAGRA FIJA VIDRIO INTERNO
P14	R58001770	2	PERNO CERNIERA VETRO SR2000	INNER GLASS HINGE PIN	PIVOT CHARNIERE VERRE INTERIEUR	SCHARNIERBOLZEN F. INNENSCHEIBE	PERNO BISAGRA VIDRIO INTERNO
P15	R70050180	6	DISTANZIALE VETRO 15x8 SIL.55SH M4x12 A2	THICKNESS	EPAISSEUR	DICKE	ESPESOR
P16	R58001860	1	PERNO SUPP. PARATIE ALPHATECH	SIDE RUNNERS SUPPORT	SUPPORT GLISSIERES	BOLZEN AUFLAGESCHIENEN	PERNO PARATIA

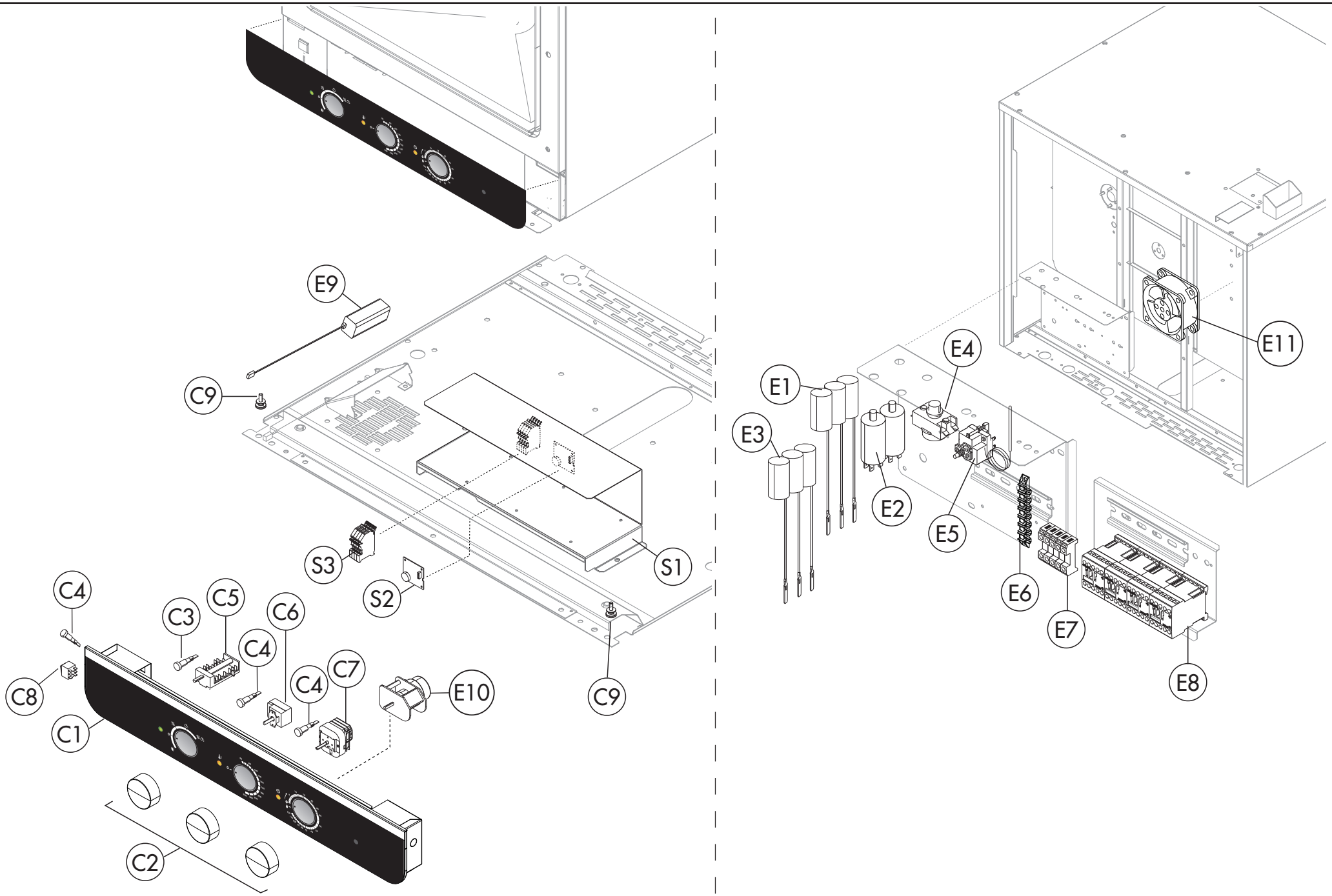

TAV. C

ICEM101

POS.	COD.	Pz.	DESCRIZIONE	DESCRIPTION	DESCRIPTION	BESCHREIBUNG	DESCRIPCIÓN
CRUSCOTTO MECCANICO / MECHANIC CONTROL PANEL / CONTRÔLE / STEUEREINHEIT / PANEL DE CONTROL							
C1	R17410690	1	CRUSCOTTO + VETRO ICE/GM051-71-101 LAINOX	DISPLAY + GLASS ICE/GM051-71-101 LAINOX	DISPLAY + VITRE ICE/GM051-71-101 LAINOX	DISPLAY + GLASS ICE/GM051-71-101 LAINOX	DISPLAY + VIDRIO ICE/GM051-71-101 LAINOX
C1	R17410690A	1	CRUSCOTTO + VETRO ICE/GM051-71-101 ALPH-NEUTRO	DISPLAY + GLASS ICE/GM051-71-101 ALPH-NEUTRO	DISPLAY + VITRE ICE/GM051-71-101 ALPH-NEUTRO	DISPLAY + GLASS ICE/GM051-71-101 ALPH-NEUTRO	DISPLAY + VIDRIO ICE/GM051-71-101 ALPH-NEUTRO
C2	R69030350	3	MANOPOLA C/INDICATORE ICON MECC.2015	KNOB KIT	POIGNEE COMMANDE	DREHKNOPF	PULSADOR MANETA
C3	R65270350	1	LUCE SPIA VERDE TESTA PIATTA ICON 2015	GREEN INDICATING LIGHT	LAMPE TEMOIN VERT	GRUENE KONTROLLAMPE	LAMPARA PILOTO VERDE
C4	R65270330	3	LUCE SPIA GIALLA TESTA PIATTA ICON 2015	ORANGE INDICATING LIGHT	LAMPE TEMOIN ORANGE	ORANGENE KONTROLLAMPE	LAMPARA PILOTO NARANJA
C5	R65080020	1	COMMUTATORE 5 POS.	MAIN SELECTOR SWITCH	COMMUTATEUR	SCHALTER	CONMUTADOR
C6	R65070511	1	TERMOSTATO 50/280°C	THERMOSTAT 50/280°C	THERMOSTAT 50/280°C	THERMOSTAT 50/280°C	TERMOSTATO 50/280°C
C7	R65090110	1	TIMER ELETTROM. 120'C	TIMER	MINUTERIE	ZEITSCHALTUHR	TEMPORIZADOR
C8	R65260310	1	DEVIATORE A LEVA PER ICON MECCANICI FINO ALLA SETTIMANA 50/2015	SWITCH LEVER UNTIL WEEK 50/2015	INTERRUPTEUR À LEVIER ÉLIMINÉ DU SEMAINE 50/2015	WECHSELSCHALTER BIS WOCHE 50/2015	PALANCA DEL INTERRUPTOR ELIMINATO DEL SEMANA 50/2015
C8	R65260210	1	DEVIATORE BIPOLARE DALLA SETTIMANA 51/2015	BIPOLAR SWITCH SINCE WEEK 51/2015	INTERRUPTEUR BIPOLAIRE DU SEMAINE 51/2015	BIPOLARSCHALTER VOM WOCHE 51/2015	INTERRUPTOR BIPOLAR DEL SEMANA 51/2015
C9	R69010990	2	MANOPOLA M4 FISSAGGIO CRUSCOTTI ICON	DISPLAY SCREW	VIS DE BLOCAGE DISPLAY	SCHRAUBE FÜR DISPLAY	TORNILLO FIJACION DISPLAY
SCHEDA BASE / MAIN PC BOARD / FICHE PANNEAU PRINCIPAL / HAUPTPLATINE / PLACA BASE							
S1	R17108080	1	SCHEDA BASE COMPLETA ICON MECCANICI ELETTRICI	MAIN PC BOARD ICON 2015	FICHE PANNEAU PRINCIPAL ICON 2015	HAUPTPLATINE ICON 2015	PLACA BASE ICON 2015
S2	R65302610	1	SCHEDA BUZZER 20"	PC BOARD BUZZER	SONNERIE PLATINE	PLATINENSUMMER	ZUMBADOR PLACA ELECTRONICA
S3	R65210020	4	PORTAFUSIBILE BARRA DIN 5x20	FUSE CARRIER	PORTE-FUSIBLE	SICHERUNGSHALTER	PORTAFUSIBLE
COMPONENTI ELETTRICI / ELECTRONIC COMPONENTS / COMPOSANTS ÉLETRIQUES / ELEKTRISCHE BAUTEILE / COMPONENTES ELÉTRICOS							
E1	R65280200	3	FILTRO Cx=0,47æ F Cy=2X10nf	INTERFERENCE SUPPRESSOR	FILTRE ANTIPARASITES	STOERSCHUTZFILTER	FILTRO
E2	R65190080	2	CONDENS. 5μF V425-B C/CAP.C/COD.	CAPACITOR 5μF	CONDENSATEUR 5μF	KONDENSATOR 5μF	CONDENSADOR 5μF
E3	R65280260	3	FILTRO	INTERFERENCE SUPPRESSOR	FILTRE ANTIPARASITES	STOERSCHUTZFILTER	FILTRO
E4	R65070450	1	TERMOST. SICUR. BIP. 335 ø C NEGAT.	THERMOSTAT	THERMOSTAT	THERMOSTAT	TERMOSTATO
E5	R65070165	1	TERMOSTATO 65°C	THERMOSTAT 65°C	THERMOSTAT 65°C	THERMOSTAT 65°C	TERMOSTATO 65°C
E6	R65220360	1	MORSETTIERA A VITE 7 POLI	TERMINAL	BORNE	KLEMME	REGLETA
E7	R65220091	1	MORSETTIERA LX2E (TIPO 2) NEW	TERMINAL BOARD	BORNIER	KLEMMLEISTE	REGLETERA
E8	R65140700	4	TELERUTTORE DIL M9-01 4KW-20A	CONTACTOR	CONTACTEUR	SCHUETZ	CONTACTOR
E9	R65187220	1	ALIMENTATORE APV-12-24	POWER SUPPLY	BLOC D'ALIMENTATION	NETZTEIL	ADAPTADOR DE CORRIENTE ALTERNA
E10	R65090170	1	INVERSORE CICLICO 8' 3	REVERSING SWITCH	INVERSEUR	POLWENDER	INVERSOR CICLICO
E11	R65060050	1	VENTILATORE COMPATTO D.120	COMPONENTS VENTILATION MOTOR D.120	MOTEUR DE REFROIDISSMENT D.120	ABKULUNGS MOTOR D.120	MOTOR DE ENFRIAMIENTO D.120